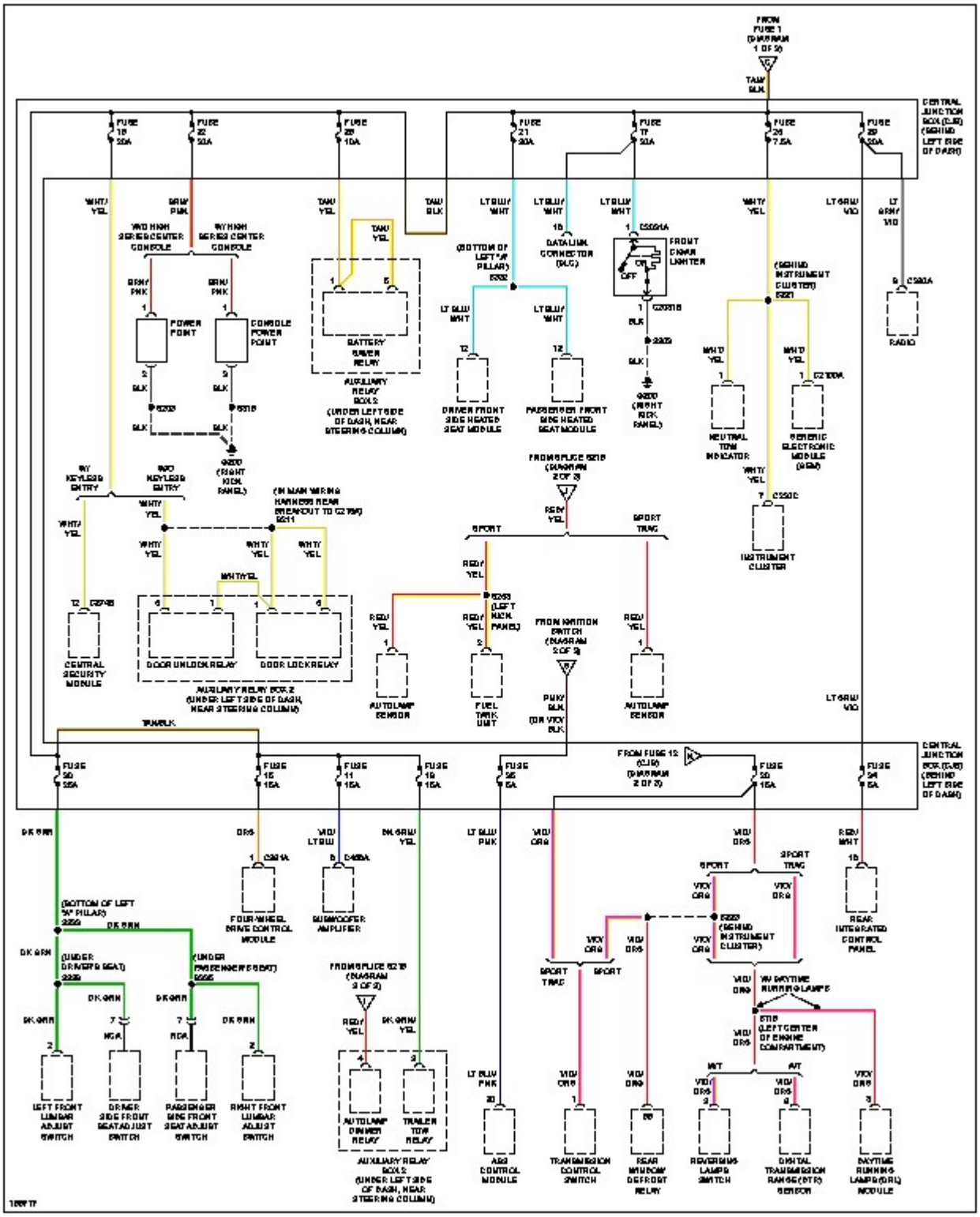

FROM FUSE 1 (DIAGRAM 1 OF 3)
CENTRAL JUNCTION BOX (CJB) (BEHIND LEFT SIDE OF DASH)
FUSE 18 30A
FUSE 22 30A
FUSE 28 10A
FUSE 21 30A
FUSE 17 30A
FUSE 26 7.5A
FUSE 29 30A
WHT/YEL
BRN/PNK
TAN/YEL
TAN/BLK
LT BLU/WHT
LT GRN/VIO
W/O HIGH SERIES CENTER CONSOLE
W/ HIGH SERIES CENTER CONSOLE
POWER POINT
CONSOLE POWER POINT
BATTERY SAVER RELAY
AUXILIARY RELAY BOX 2 (UNDER LEFT SIDE OF DASH, NEAR STEERING COLUMN)
(BOTTOM OF LEFT "A" PILLAR)
DATALINK CONNECTOR (DLC)
FRONT CIGAR LIGHTER
OFF
(BEHIND INSTRUMENT CLUSTER)
RADIO
DRIVER FRONT SIDE HEATED SEAT MODULE
PASSENGER FRONT SIDE HEATED SEAT MODULE
NEUTRAL TOW INDICATOR
GENERIC ELECTRONIC MODULE (GEM)
INSTRUMENT CLUSTER
W/ KEYLESS ENTRY
W/O KEYLESS ENTRY
(IN MAIN WIRING HARNESS NEAR BREAKOUT TO C2794)
FROM SPLICE 5218 (DIAGRAM 2 OF 3)
SPORT
SPORT TRAC
CENTRAL SECURITY MODULE
DOOR UNLOCK RELAY
DOOR LOCK RELAY
AUXILIARY RELAY BOX 2 (UNDER LEFT SIDE OF DASH, NEAR STEERING COLUMN)
AUTOLAMP SENSOR
FUEL TANK UNIT
FROM IGNITION SWITCH (DIAGRAM 2 OF 3)
PNK/BLK (OR VIO/BLK)
FROM FUSE 12 (CJB) (DIAGRAM 2 OF 3)
FUSE 30 25A
FUSE 15 15A
FUSE 11 15A
FUSE 19 15A
FUSE 25 5A
FUSE 20 15A
FUSE 24 5A
DK GRN
ORG
VIO/LT BLU
BK GRN/YEL
LT BLU/PNK
VIO/ORG
REB/WHT
FOUR-WHEEL DRIVE CONTROL MODULE
SUBWOOFER AMPLIFIER
REAR INTEGRATED CONTROL PANEL
(BOTTOM OF LEFT "A" PILLAR)
(UNDER DRIVER'S SEAT)
(UNDER PASSENGER'S SEAT)
FROM SPLICE 5218 (DIAGRAM 2 OF 3)
W/ DAYTIME RUNNING LAMPS
(LEFT CENTER OF ENGINE COMPARTMENT)
LEFT FRONT LUMBAR ADJUST SWITCH
DRIVER SIDE FRONT SEAT ADJUST SWITCH
PASSENGER SIDE FRONT SEAT ADJUST SWITCH
RIGHT FRONT LUMBAR ADJUST SWITCH
AUTOLAMP DIMMER RELAY
TRAILER TOW RELAY
AUXILIARY RELAY BOX 2 (UNDER LEFT SIDE OF DASH, NEAR STEERING COLUMN)
ABS CONTROL MODULE
TRANSMISSION CONTROL SWITCH
REAR WINDOW DEFROST RELAY
REVERSING LAMPS SWITCH
DIGITAL TRANSMISSION RANGE (DTR) SENSOR
DAYTIME RUNNING LAMPS (DRL) MODULE