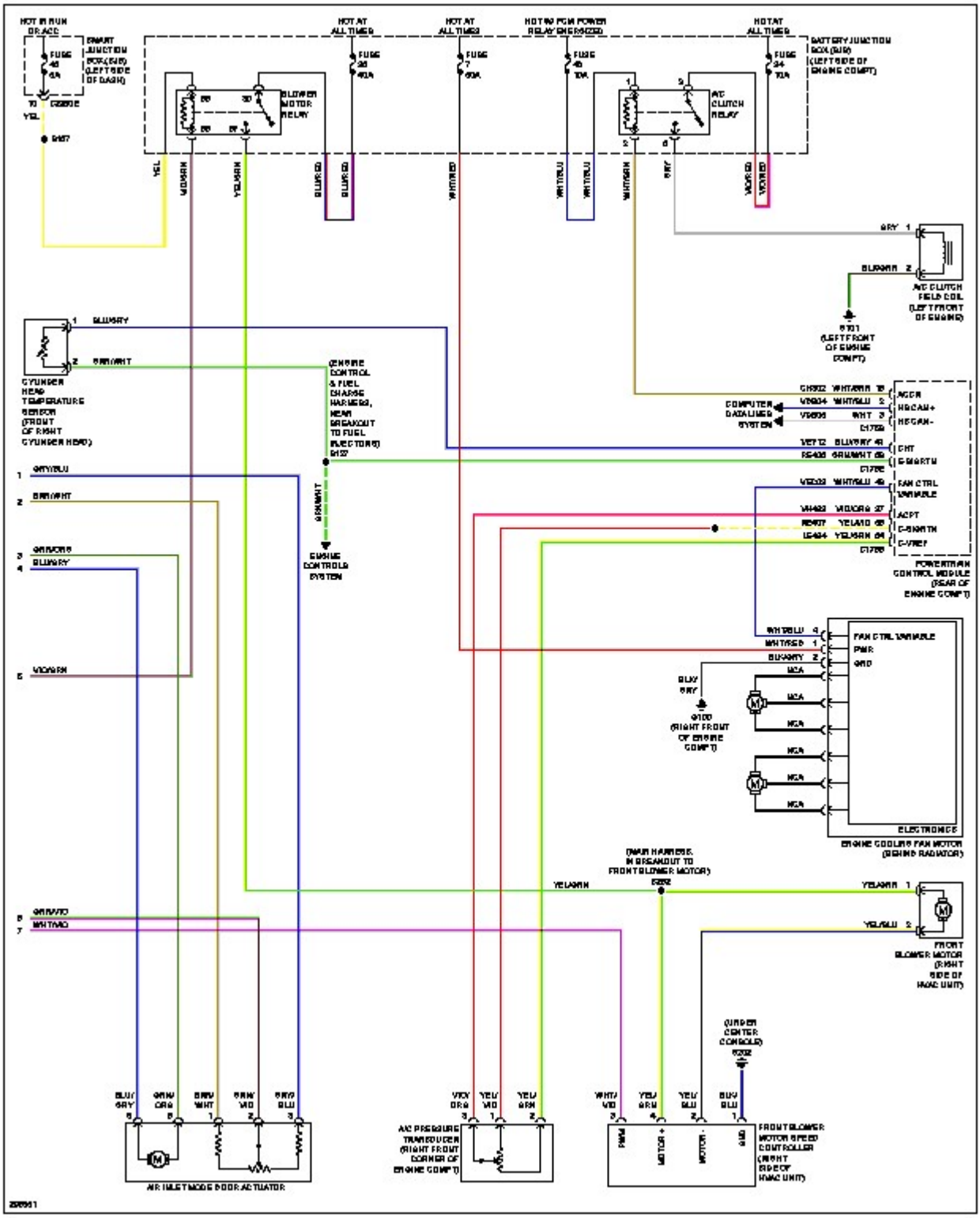

HOT IN RUN OR ACC
SMART JUNCTION BOX (SJB) (LEFT SIDE OF DASH)
FUSE 46 6A
YEL
HOT AT ALL TIMES
HOT AT ALL TIMES
HOT W/ PCM POWER RELAY ENERGIZED
HOT AT ALL TIMES
BATTERY JUNCTION BOX (BJB) (LEFT SIDE OF ENGINE COMPT)
FUSE 26 40A
FUSE 7 60A
FUSE 46 10A
FUSE 24 10A
BLOWER MOTOR RELAY
A/C CLUTCH RELAY
YEL
VIO/GRN
YEL/GRN
BLU/RED
BLU/RED
WHT/RED
WHT/BLU
WHT/BLU
WHT/GRN
GRY
VIO/RED
VIO/RED
GRY
BLU/GRN
A/C CLUTCH FIELD COIL (LEFT FRONT OF ENGINE)
G101 (LEFT FRONT OF ENGINE COMPT)
BLU/GRY
GRN/WHT
CYLINDER HEAD TEMPERATURE SENSOR (FRONT OF RIGHT CYLINDER HEAD)
(ENGINE CONTROL & FUEL CHARGE HARNESS, NEAR BREAKOUT TO FUEL INJECTORS) G127
GRN/WHT
ENGINE CONTROLS SYSTEM
GRY/BLU
GRN/WHT
GRN/ORG
BLU/GRY
VIO/GRN
GRN/VIO
WHT/VIO
COMPUTER DATALINES SYSTEM
AGCM
HSCAM+
HSCAM-
CHT
E-SIGRTN
FAN CTRL VARIABLE
ACPT
C-SIGRTN
C-VREF
POWERTRAIN CONTROL MODULE (REAR OF ENGINE COMPT)
WHT/BLU
WHT/RED
BLU/GRY
FAN CTRL VARIABLE
PWR
GND
MCA
BLU/GRY
G100 (RIGHT FRONT OF ENGINE COMPT)
ELECTRONICS
ENGINE COOLING FAN MOTOR (BEHIND RADIATOR)
(MAIN HARNESS, IN BREAKOUT TO FRONT BLOWER MOTOR) G202
YEL/GRN
YEL/GRN
YEL/BLU
FRONT BLOWER MOTOR (RIGHT SIDE OF HVAC UNIT)
(UNDER CENTER CONSOLE) G202
BLU/GRY
GRN/ORG
GRN/WHT
GRN/VIO
GRN/BLU
AIR INLET MODE DOOR ACTUATOR
VIO/ORG
YEL/VIO
YEL/GRN
A/C PRESSURE TRANSDUCER (RIGHT FRONT CORNER OF ENGINE COMPT)
WHT/VIO
YEL/GRN
YEL/BLU
BLU/BLU
PWM
MOTOR +
MOTOR -
GND
FRONT BLOWER MOTOR SPEED CONTROLLER (RIGHT SIDE OF HVAC UNIT)