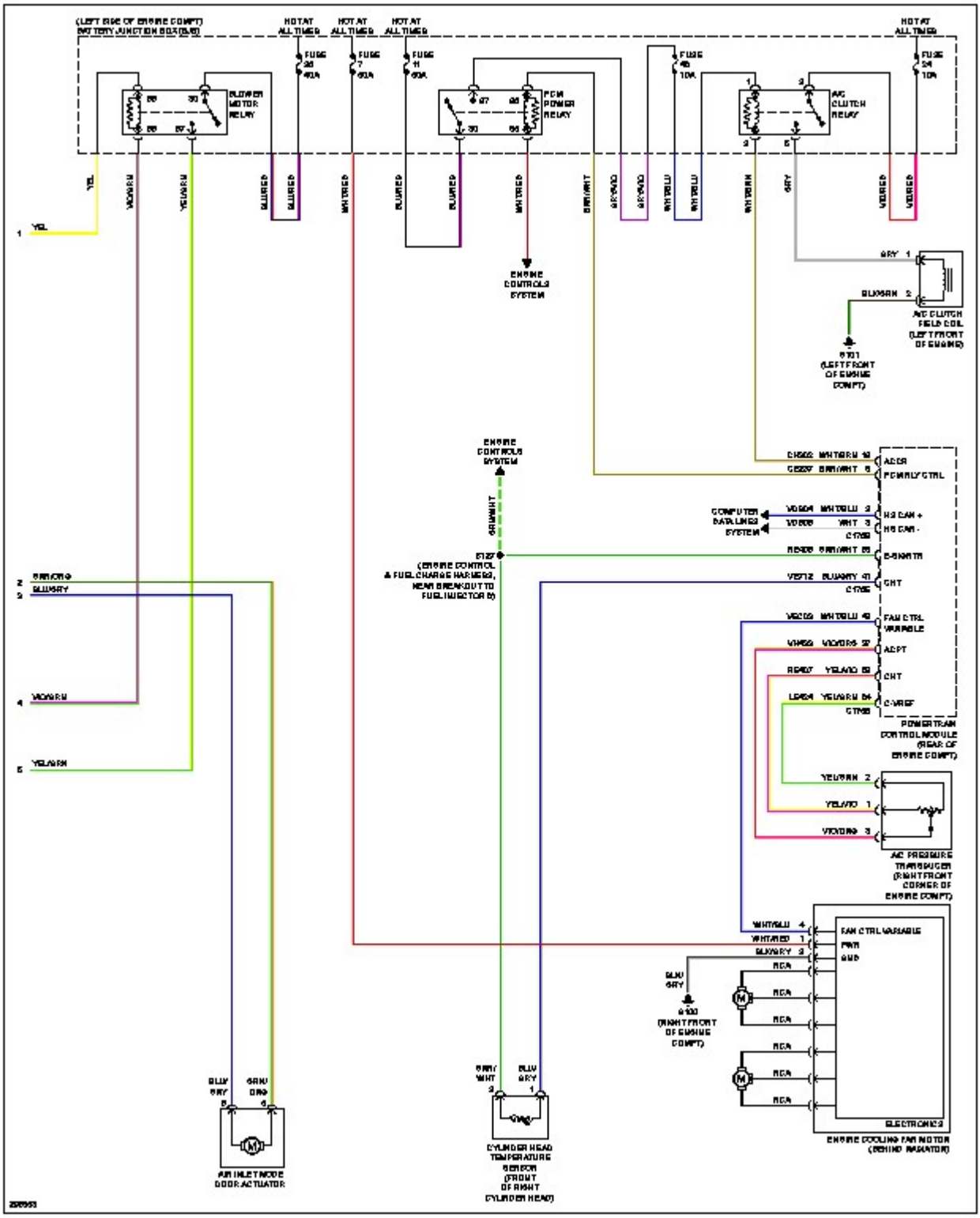

(LEFT SIDE OF ENGINE COMPT)
BATTERY JUNCTION BOX (B/B)
HOT AT ALL TIMES
FUSE 26 40A
FUSE 7 60A
FUSE 11 60A
FUSE 45 10A
FUSE 24 10A
BLOWER MOTOR RELAY
PCM POWER RELAY
A/C CLUTCH RELAY
YEL
VIO/GRN
YEL/GRN
BLU/RED
WHT/RED
BRN/WHT
GRY/VIO
WHT/BLU
GRY
VIO/RED
ENGINE CONTROLS SYSTEM
A/C CLUTCH FIELD COIL (LEFT FRONT OF ENGINE)
S101 (LEFT FRONT OF ENGINE COMPT)
ACCR
PCM RLY CTRL
COMPUTER DATA LINES SYSTEM
HS CAN +
HS CAN -
E-SIGNTR
CHT
FAN CTRL VARIABLE
ACPT
C-VREF
POWER TRAIN CONTROL MODULE (REAR OF ENGINE COMPT)
AC PRESSURE TRANSDUCER (RIGHT FRONT CORNER OF ENGINE COMPT)
FAN CTRL VARIABLE
PWR
GND
ELECTRONICS
ENGINE COOLING FAN MOTOR (BEHIND RADIATOR)
S100 (RIGHT FRONT OF ENGINE COMPT)
S127 (ENGINE CONTROL & FUEL CHARGE HARNESS, NEAR BREAKOUT TO FUEL INJECTOR B)
AIR INLET MODE DOOR ACTUATOR
CYLINDER HEAD TEMPERATURE SENSOR (FRONT OF RIGHT CYLINDER HEAD)