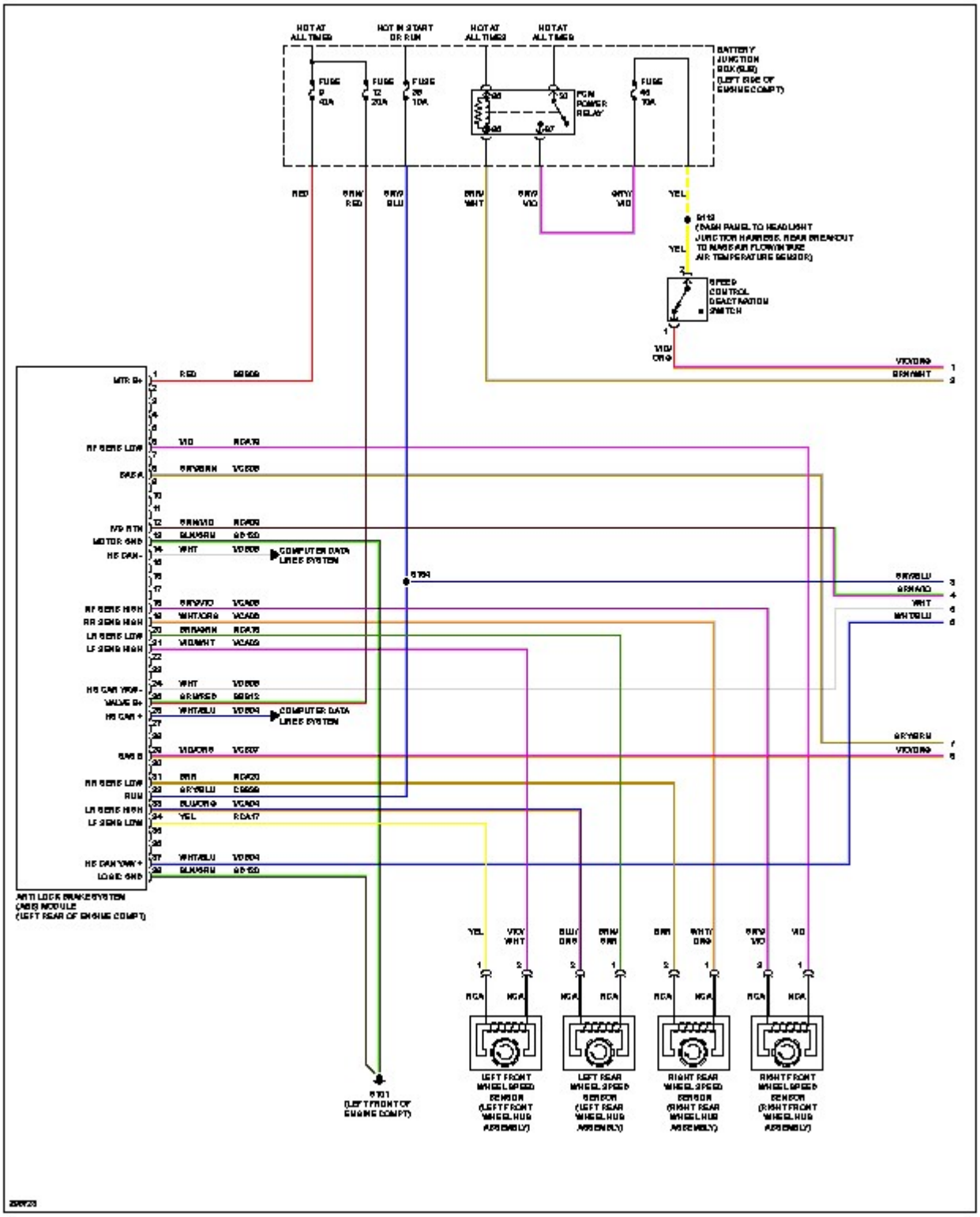
HOT AT ALL TIMES
HOT IN START OR RUN
HOT AT ALL TIMES
HOT AT ALL TIMES
BATTERY JUNCTION BOX (BJB) (LEFT SIDE OF ENGINE COMPT)
FUSE 9 40A
FUSE 12 20A
FUSE 29 10A
FUSE 46 10A
IGN POWER RELAY
RED
BRN/RED
BRN/BLU
BRN/WHT
BRN/VIO
WHT/VIO
YEL
S112 (DASH PANEL TO HEADLIGHT JUNCTION HARNESS, REAR BREAKOUT TO MASS AIR FLOW (MAF) AIR TEMPERATURE SENSOR)
SPEED CONTROL DEACTIVATION SWITCH
VIO/ORG
ORG
VIO/ORG
BRN/WHT
MTR B+
RF SENS LOW
SASA
MTR RTN
MOTOR GND
HS CAN-
COMPUTER DATA LINES SYSTEM
S194
BRN/BLU
BRN/VIO
WHT
WHT/BLU
RF SENS HIGH
RR SENS HIGH
LR SENS LOW
LF SENS HIGH
HS CAN WIW-
VALVE B+
HS CAN +
COMPUTER DATA LINES SYSTEM
BRN/BLU
VIO/ORG
SAS B
RR SENS LOW
RUN
LR SENS HIGH
LF SENS LOW
HS CAN WIW +
LOGIC GND
ANTI LOCK BRAKE SYSTEM (ABS) MODULE (LEFT REAR OF ENGINE COMPT)
YEL
VIO/WHT
BLU/ORG
BRN/BRN
BRN
WHT/ORG
BRN/VIO
VIO
RGA
LEFT FRONT WHEEL SPEED SENSOR (LEFT FRONT WHEEL HUB ASSEMBLY)
LEFT REAR WHEEL SPEED SENSOR (LEFT REAR WHEEL HUB ASSEMBLY)
RIGHT REAR WHEEL SPEED SENSOR (RIGHT REAR WHEEL HUB ASSEMBLY)
RIGHT FRONT WHEEL SPEED SENSOR (RIGHT FRONT WHEEL HUB ASSEMBLY)
S101 (LEFT FRONT OF ENGINE COMPT)