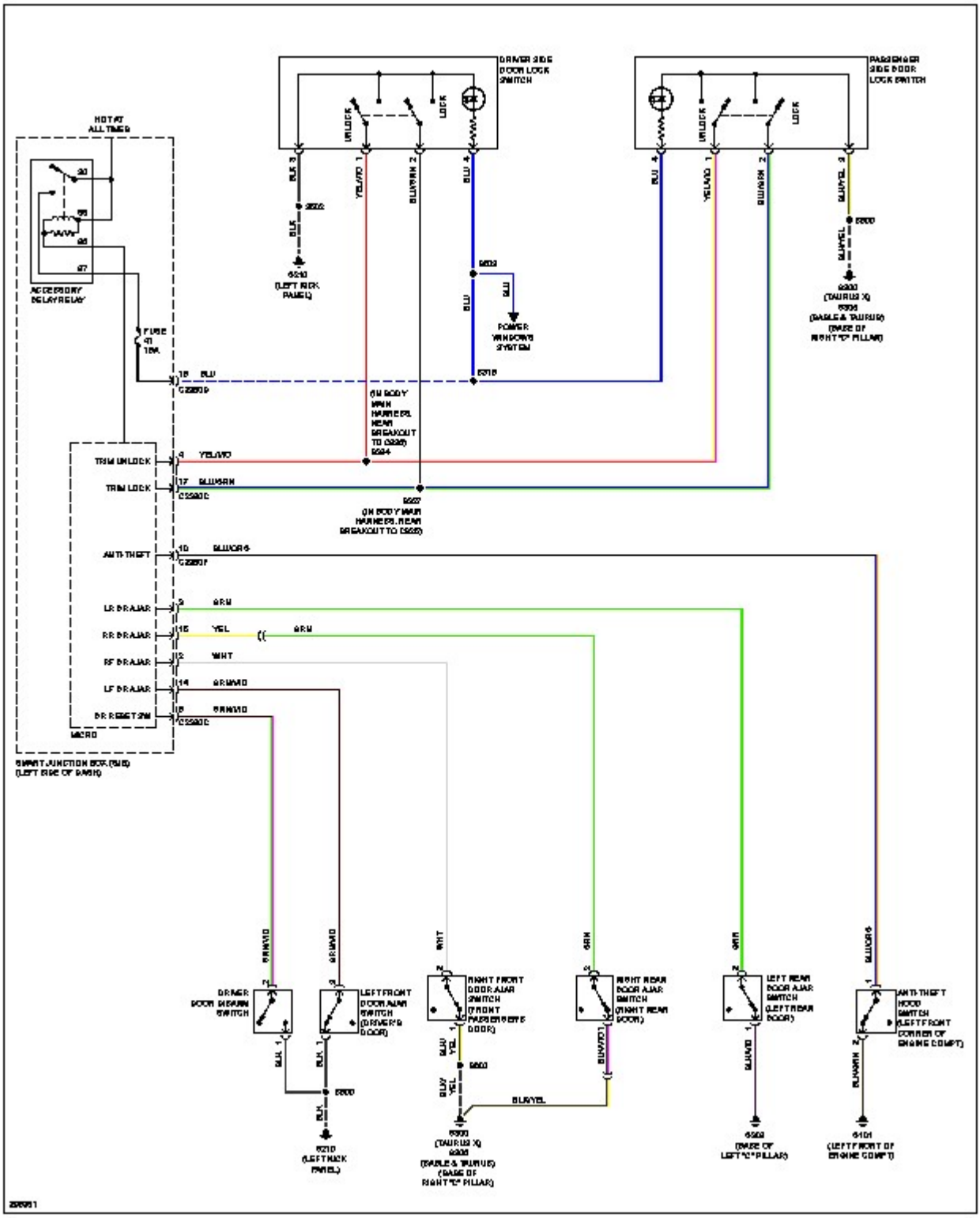
DRIVER SIDE DOOR LOCK SWITCH
PASSENGER SIDE DOOR LOCK SWITCH
UNLOCK
LOCK
HOT AT ALL TIMES
ACCESSORY DELAY RELAY
FUSE 41 15A
TRIM UNLOCK
TRIM LOCK
ANTI-THEFT
LR DR AJAR
RR DR AJAR
RF DR AJAR
LF DR AJAR
DR RESET SW
MICRO
SMART JUNCTION BOX (SJB) (LEFT SIDE OF DASH)
(LEFT KICK PANEL)
POWER WINDOW SYSTEM
(TAURUS X)
(BASE OF RIGHT "C" PILLAR)
DRIVER DOOR DRAWN SWITCH
LEFT FRONT DOOR AJAR SWITCH (DRIVER'S DOOR)
RIGHT FRONT DOOR AJAR SWITCH (FRONT PASSENGER'S DOOR)
RIGHT REAR DOOR AJAR SWITCH (RIGHT REAR DOOR)
LEFT REAR DOOR AJAR SWITCH (LEFT REAR DOOR)
ANTI-THEFT HOOD SWITCH (LEFT FRONT CORNER OF ENGINE COMPT)
(BASE OF LEFT "C" PILLAR)
(LEFT FRONT OF ENGINE COMPT)