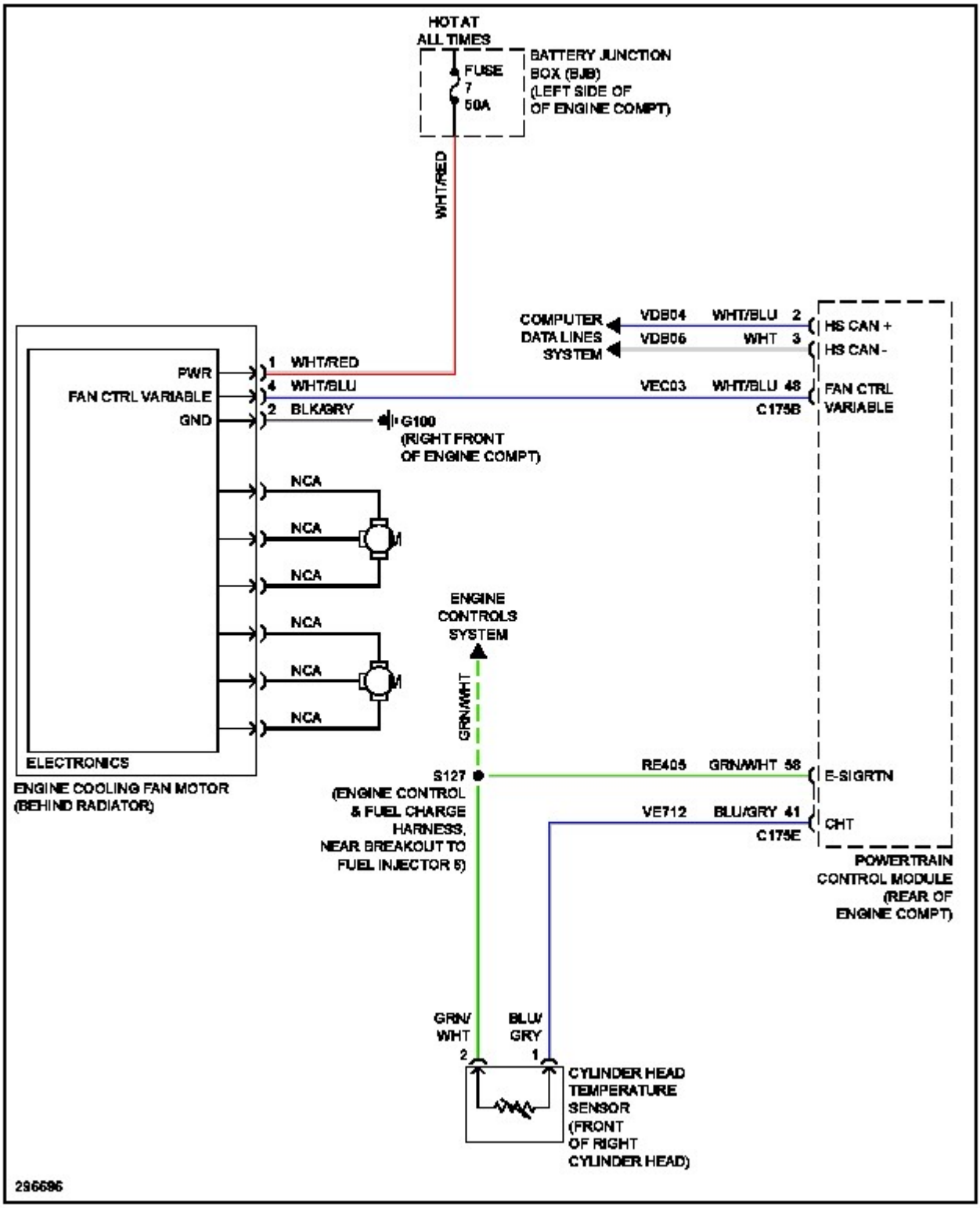
HOT AT ALL TIMES
FUSE 7 50A
BATTERY JUNCTION BOX (BJB) (LEFT SIDE OF OF ENGINE COMPT)
WHT/RED
COMPUTER DATA LINES SYSTEM
VDB04 WHT/BLU 2 HS CAN +
VDB06 WHT 3 HS CAN -
PWR
FAN CTRL VARIABLE
GND
1 WHT/RED
4 WHT/BLU
2 BLK/GRY
VEC03 WHT/BLU 48 FAN CTRL VARIABLE
C175B
G100 (RIGHT FRONT OF ENGINE COMPT)
NCA
NCA
NCA
NCA
NCA
NCA
ENGINE CONTROLS SYSTEM
GRN/WHT
ELECTRONICS
ENGINE COOLING FAN MOTOR (BEHIND RADIATOR)
S127 (ENGINE CONTROL & FUEL CHARGE HARNESS, NEAR BREAKOUT TO FUEL INJECTOR 5)
RE405 GRN/WHT 58 E-SIGRTN
VE712 BLU/GRY 41 CHT
C175E
POWERTRAIN CONTROL MODULE (REAR OF ENGINE COMPT)
GRN/ WHT 2
BLU/ GRY 1
CYLINDER HEAD TEMPERATURE SENSOR (FRONT OF RIGHT CYLINDER HEAD)
296696