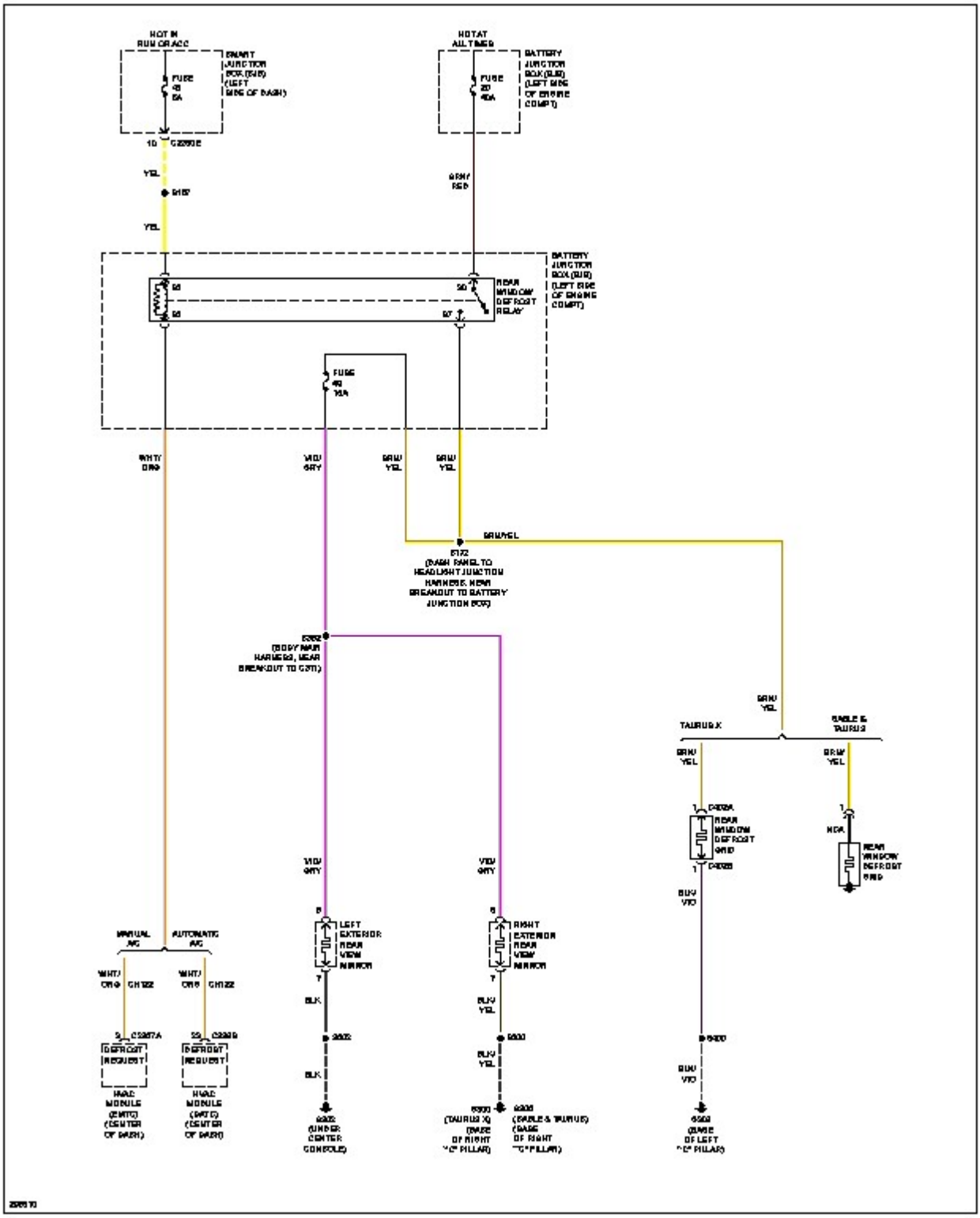
HOT IN RUN OR ACC
SMART JUNCTION BOX (SJB) (LEFT SIDE OF DASH)
FUSE 48 5A
HOT AT ALL TIMES
BATTERY JUNCTION BOX (BJB) (LEFT SIDE OF ENGINE COMPT)
FUSE 20 40A
YEL
BRN/RED
YEL
BATTERY JUNCTION BOX (BJB) (LEFT SIDE OF ENGINE COMPT)
REAR WINDOW DEFROST RELAY
FUSE 48 10A
WHT/ORG
VIO/GRY
BRN/YEL
BRN/YEL
BRN/YEL
(DASH PANEL TO HEADLIGHT JUNCTION HARNESS, NEAR BREAKOUT TO BATTERY JUNCTION BOX)
(BODY MAIN HARNESS, NEAR BREAKOUT TO G311)
BRN/YEL
TAURUS X
EAGLE & TAURUS
BRN/YEL
BRN/YEL
REAR WINDOW DEFROST GRID
REAR WINDOW DEFROST GRID
BLK/VIO
VIO/GRY
VIO/GRY
LEFT EXTERIOR REAR VIEW MIRROR
RIGHT EXTERIOR REAR VIEW MIRROR
BLK
BLK/YEL
BLK
BLK/YEL
(UNDER CENTER CONSOLE)
(TAURUS X) (BASE OF RIGHT "C" PILLAR)
(EAGLE & TAURUS) (BASE OF RIGHT "C" PILLAR)
(BASE OF LEFT "C" PILLAR)
MANUAL A/C
AUTOMATIC A/C
WHT/ORG
WHT/ORG
DEFROST REQUEST
DEFROST REQUEST
HVAC MODULE (EMTC) (CENTER OF DASH)
HVAC MODULE (DATC) (CENTER OF DASH)