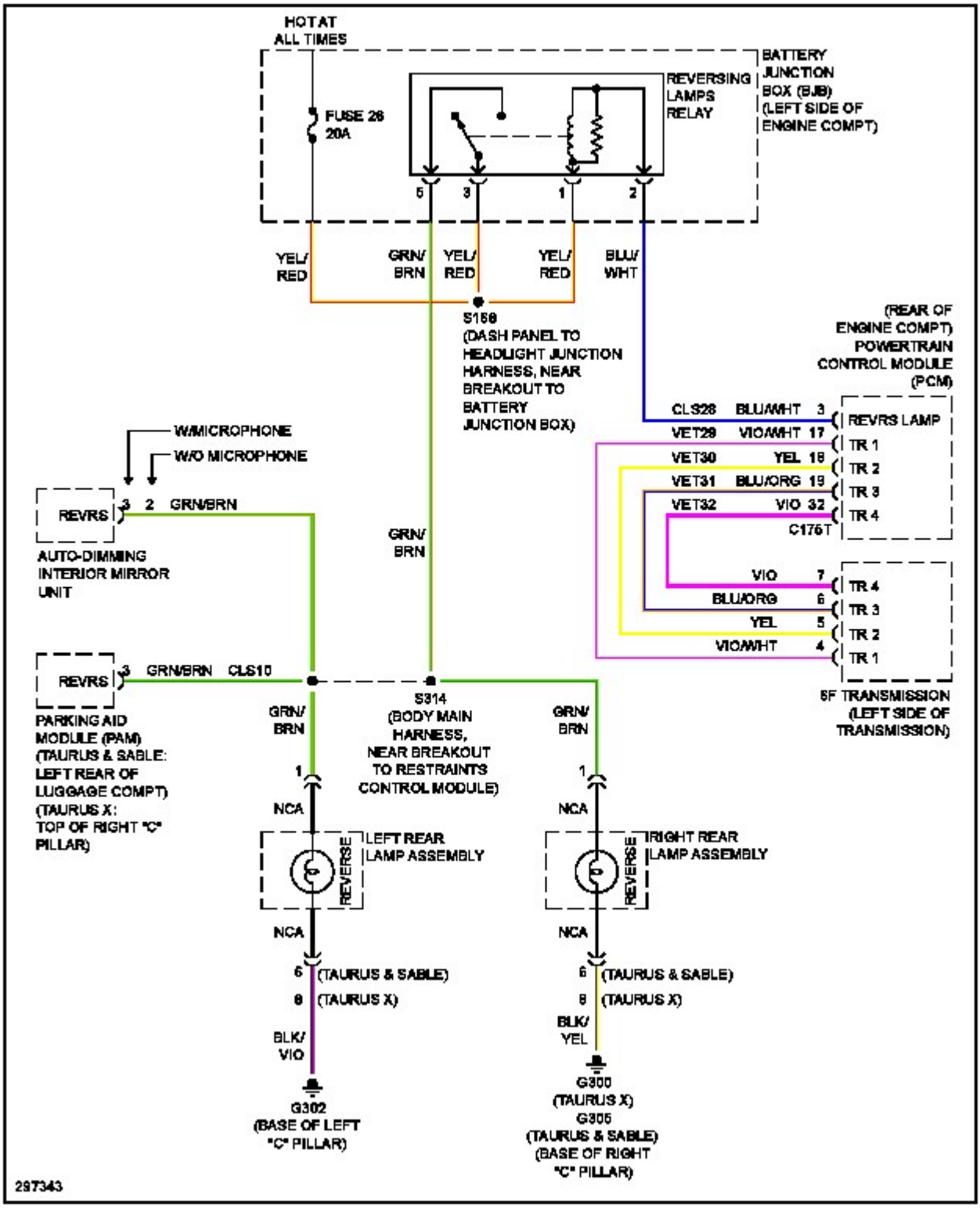
HOT AT ALL TIMES
FUSE 26 20A
REVERSING LAMPS RELAY
BATTERY JUNCTION BOX (BJB) (LEFT SIDE OF ENGINE COMPT)
5
3
1
2
YEL/RED
GRN/BRN
YEL/RED
YEL/RED
BLU/WHT
S158 (DASH PANEL TO HEADLIGHT JUNCTION HARNESS, NEAR BREAKOUT TO BATTERY JUNCTION BOX)
(REAR OF ENGINE COMPT) POWERTRAIN CONTROL MODULE (PCM)
CLS28 BLU/WHT 3 REVRS LAMP
VET29 VIO/WHT 17 TR 1
VET30 YEL 18 TR 2
VET31 BLU/ORG 19 TR 3
VET32 VIO 32 TR 4
C175T
VIO 7 TR 4
BLU/ORG 6 TR 3
YEL 5 TR 2
VIO/WHT 4 TR 1
5F TRANSMISSION (LEFT SIDE OF TRANSMISSION)
W/MICROPHONE
W/O MICROPHONE
REVRS 3 2 GRN/BRN
AUTO-DIMMING INTERIOR MIRROR UNIT
GRN/BRN
REVRS 3 GRN/BRN CLS10
PARKING AID MODULE (PAM) (TAURUS & SABLE: LEFT REAR OF LUGGAGE COMPT) (TAURUS X: TOP OF RIGHT "C" PILLAR)
S314 (BODY MAIN HARNESS, NEAR BREAKOUT TO RESTRAINTS CONTROL MODULE)
GRN/BRN
GRN/BRN
1
1
NCA
NCA
LEFT REAR LAMP ASSEMBLY
RIGHT REAR LAMP ASSEMBLY
REVERSE
REVERSE
NCA
NCA
6 (TAURUS & SABLE)
8 (TAURUS X)
6 (TAURUS & SABLE)
8 (TAURUS X)
BLK/VIO
BLK/YEL
G302 (BASE OF LEFT "C" PILLAR)
G300 (TAURUS X)
G305 (TAURUS & SABLE) (BASE OF RIGHT "C" PILLAR)
297343