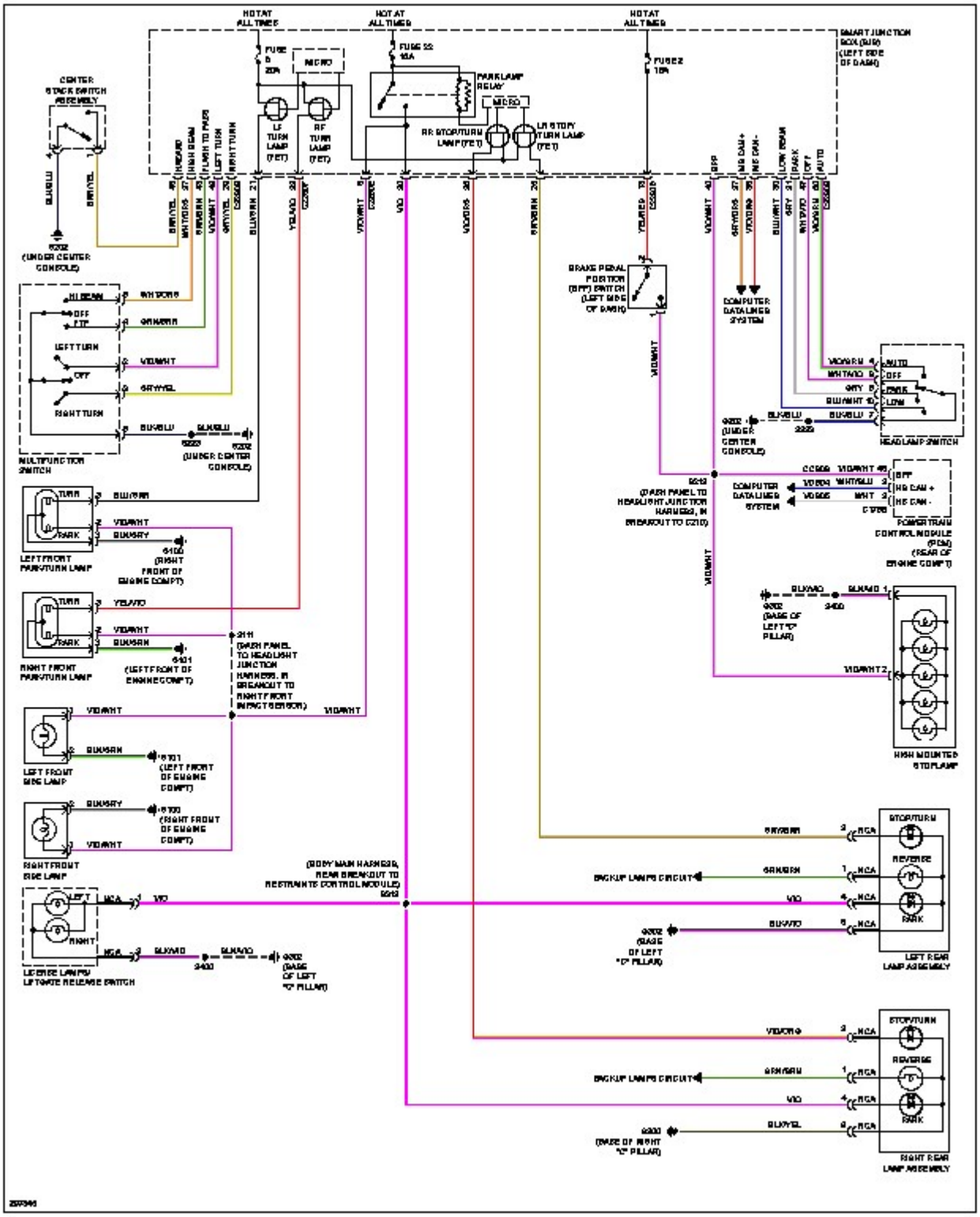
HOT AT ALL TIMES
HOT AT ALL TIMES
HOT AT ALL TIMES
SMART JUNCTION BOX (SJB) (LEFT SIDE OF DASH)
FUSE 5 20A
MICRO
FUSE 22 10A
PARK LAMP RELAY
MICRO
FUSE 2 10A
CENTER STACK SWITCH ASSEMBLY
LF TURN LAMP (FET)
RF TURN LAMP (FET)
RR STOP/TURN LAMP (FET)
LR STOP/ TURN LAMP (FET)
(UNDER CENTER CONSOLE)
MULTIFUNCTION SWITCH
HI BEAM
OFF
FTP
LEFT TURN
OFF
RIGHT TURN
(UNDER CENTER CONSOLE)
BRAKE PEDAL POSITION (BPP) SWITCH (LEFT SIDE OF DASH)
COMPUTER DATA LINES SYSTEM
(UNDER CENTER CONSOLE)
HEADLAMP SWITCH
AUTO
OFF
PARK
LOW
(DASH PANEL TO HEADLIGHT JUNCTION HARNESS, IN BREAKOUT TO C210)
COMPUTER DATA LINES SYSTEM
OFF
HS CAN +
HS CAN -
POWERTRAIN CONTROL MODULE (PCM) (REAR OF ENGINE COMPT)
LEFT FRONT PARK/TURN LAMP
TURN
PARK
(RIGHT FRONT OF ENGINE COMPT)
RIGHT FRONT PARK/TURN LAMP
TURN
PARK
(LEFT FRONT OF ENGINE COMPT)
(DASH PANEL TO HEADLIGHT JUNCTION HARNESS, IN BREAKOUT TO RIGHT FRONT IMPACT SENSOR)
(BASE OF LEFT "C" PILLAR)
HIGH MOUNTED STOP LAMP
LEFT FRONT SIDE LAMP
(LEFT FRONT OF ENGINE COMPT)
RIGHT FRONT SIDE LAMP
(RIGHT FRONT OF ENGINE COMPT)
(BODY MAIN HARNESS, REAR BREAKOUT TO RESTRAINTS CONTROL MODULE)
LICENSE LAMPS/ LIFTGATE RELEASE SWITCH
LEFT
RIGHT
(BASE OF LEFT "C" PILLAR)
STOP/TURN
REVERSE
BACKUP LAMPS CIRCUIT
(BASE OF LEFT "C" PILLAR)
LEFT REAR LAMP ASSEMBLY
STOP/TURN
REVERSE
BACKUP LAMPS CIRCUIT
(BASE OF RIGHT "C" PILLAR)
RIGHT REAR LAMP ASSEMBLY