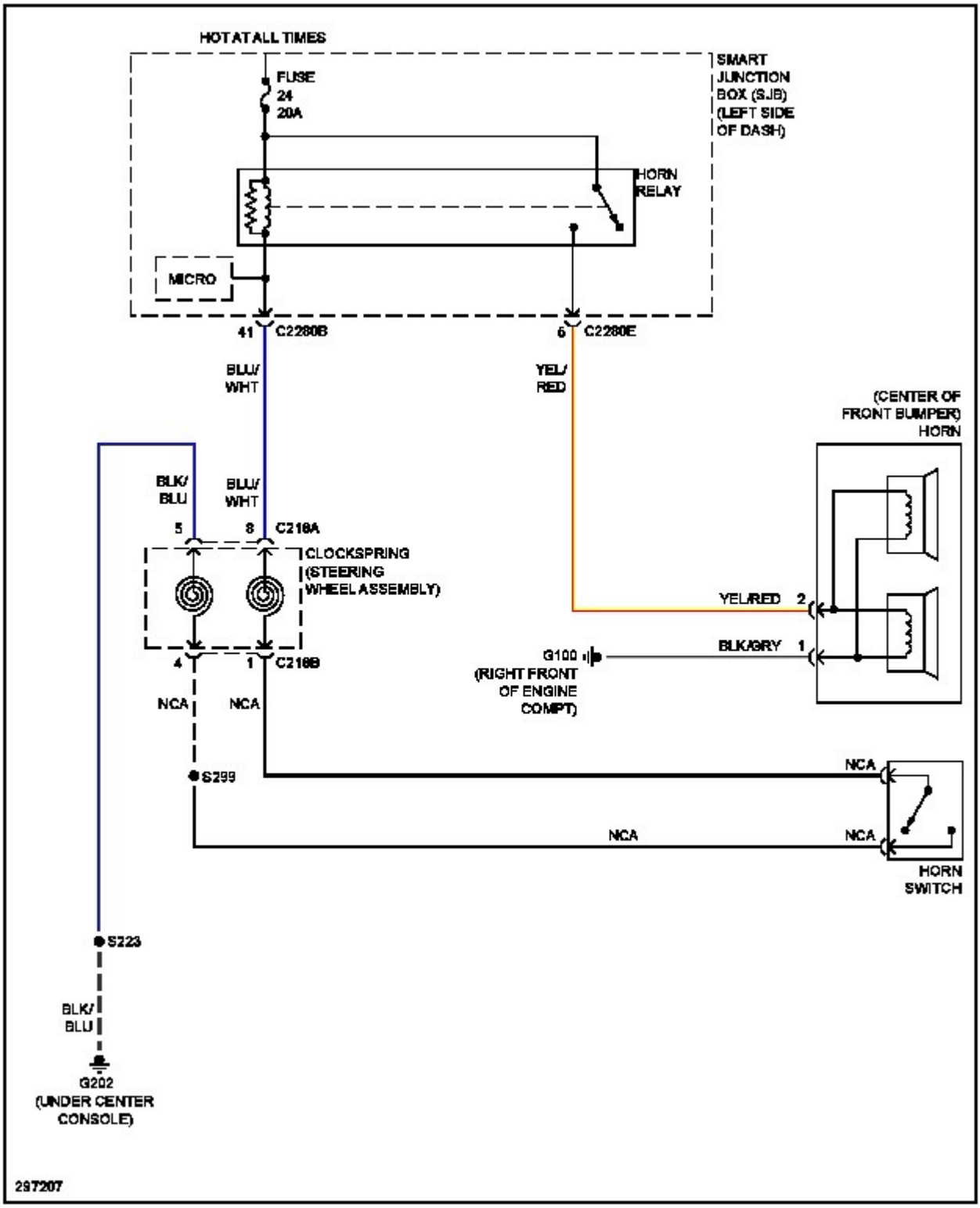
HOT AT ALL TIMES
FUSE
24
20A
SMART
JUNCTION
BOX (SJB)
(LEFT SIDE
OF DASH)
HORN
RELAY
MICRO
41
C2280B
6
C2280E
BLU/
WHT
YEL/
RED
(CENTER OF
FRONT BUMPER)
HORN
BLK/
BLU
BLU/
WHT
5
8
C218A
CLOCKSPRING
(STEERING
WHEEL ASSEMBLY)
YEL/RED
2
BLK/GRY
1
G100
(RIGHT FRONT
OF ENGINE
COMPT)
4
1
C218B
NCA
NCA
S299
NCA
NCA
NCA
HORN
SWITCH
S223
BLK/
BLU
G202
(UNDER CENTER
CONSOLE)
297207