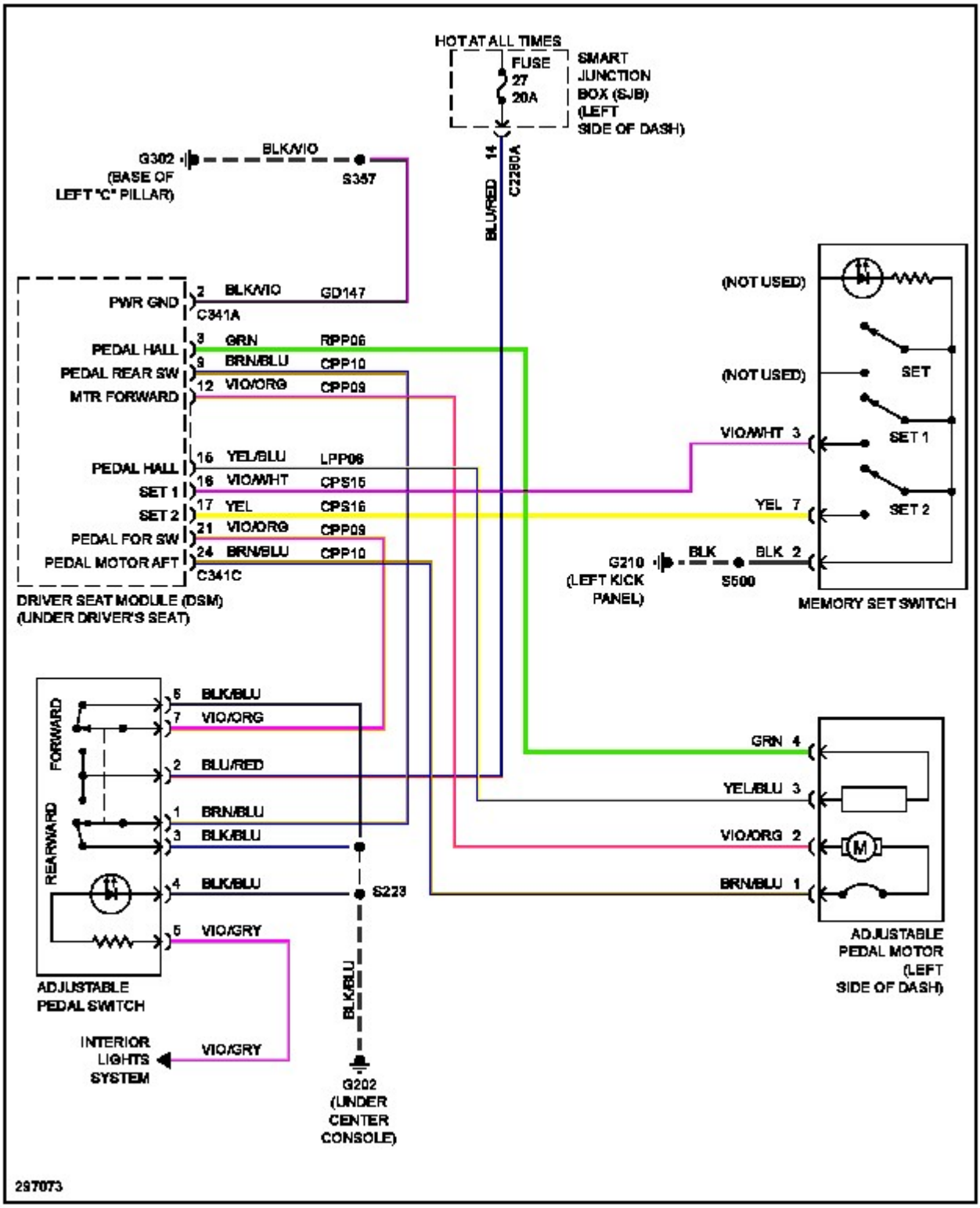
HOT AT ALL TIMES
FUSE 27 20A
SMART JUNCTION BOX (SJB) (LEFT SIDE OF DASH)
14
C2280A
BLU/RED
G302 (BASE OF LEFT "C" PILLAR)
BLK/VIO
S357
PWR GND
2 BLK/VIO GD147
C341A
PEDAL HALL
3 GRN RPP06
PEDAL REAR SW
9 BRN/BLU CPP10
MTR FORWARD
12 VIO/ORG CPP09
PEDAL HALL
15 YEL/BLU LPP06
SET 1
16 VIO/WHT CPS15
SET 2
17 YEL CPS16
PEDAL FOR SW
21 VIO/ORG CPP09
PEDAL MOTOR AFT
24 BRN/BLU CPP10
C341C
DRIVER SEAT MODULE (DSM) (UNDER DRIVER'S SEAT)
(NOT USED)
(NOT USED)
SET
VIO/WHT 3
SET 1
YEL 7
SET 2
G210 (LEFT KICK PANEL)
BLK
S500
BLK 2
MEMORY SET SWITCH
FORWARD
REARWARD
5 BLK/BLU
7 VIO/ORG
2 BLU/RED
1 BRN/BLU
3 BLK/BLU
4 BLK/BLU
S223
5 VIO/GRY
ADJUSTABLE PEDAL SWITCH
INTERIOR LIGHTS SYSTEM
VIO/GRY
BLK/BLU
G202 (UNDER CENTER CONSOLE)
GRN 4
YEL/BLU 3
VIO/ORG 2
BRN/BLU 1
M
ADJUSTABLE PEDAL MOTOR (LEFT SIDE OF DASH)
297073