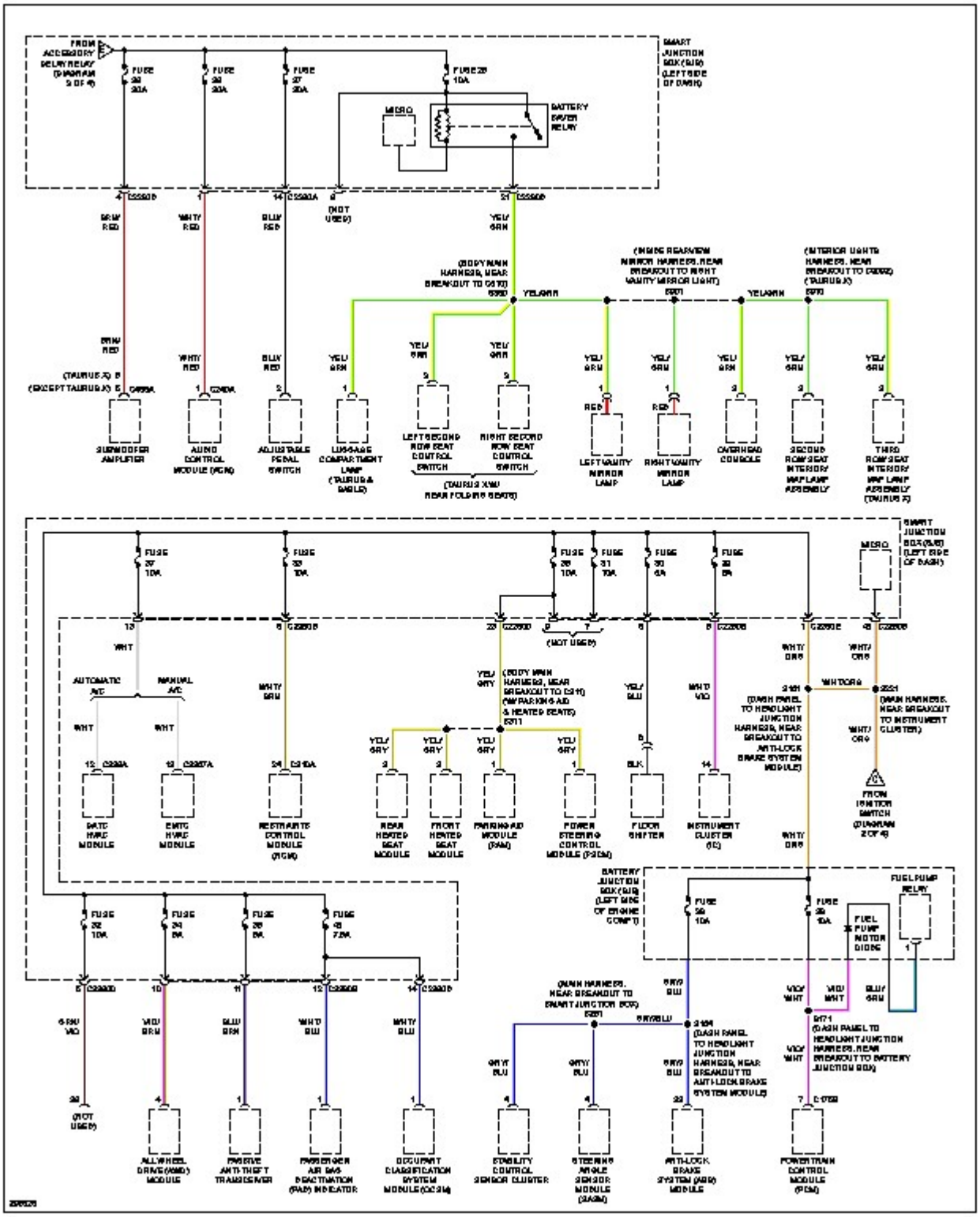
FROM ACCESSORY DELAY RELAY (DIAGRAM 3 OF 4)
FUSE 32 30A
FUSE 33 30A
FUSE 37 30A
FUSE 28 10A
SMART JUNCTION BOX (SJB) (LEFT SIDE OF DASH)
MICRO
BATTERY SAVER RELAY
(NOT USED)
(BODY WIRE HARNESS, NEAR BREAKOUT TO C310)
(INSIDE REARVIEW MIRROR HARNESS, REAR BREAKOUT TO RIGHT VANITY MIRROR LIGHT)
(INTERIOR LIGHTS HARNESS, NEAR BREAKOUT TO C2002) (TAURUS X)
(TAURUS X) B
(EXCEPT TAURUS X)
SUBWOOFER AMPLIFIER
AUDIO CONTROL MODULE (ACM)
ADJUSTABLE PEDAL SWITCH
LUGGAGE COMPARTMENT LAMP (TAURUS & SABLE)
LEFT SECOND ROW SEAT CONTROL SWITCH
RIGHT SECOND ROW SEAT CONTROL SWITCH
(TAURUS X W/ REAR FOLDING SEATS)
LEFT VANITY MIRROR LAMP
RIGHT VANITY MIRROR LAMP
OVERHEAD CONSOLE
SECOND ROW SEAT INTERIOR MAP LAMP ASSEMBLY
THIRD ROW SEAT INTERIOR MAP LAMP ASSEMBLY (TAURUS X)
SMART JUNCTION BOX (SJB) (LEFT SIDE OF DASH)
FUSE 27 10A
FUSE 33 10A
FUSE 28 10A
FUSE 31 10A
FUSE 30 5A
FUSE 29 5A
(NOT USED)
AUTOMATIC A/C
MANUAL A/C
(BODY WIRE HARNESS, NEAR BREAKOUT TO C310) (W/ PARKING AID & HEATED SEATS)
(DASH PANEL TO HEADLIGHT JUNCTION HARNESS, NEAR BREAKOUT TO ANTI-LOCK BRAKE SYSTEM MODULE)
(MAIN HARNESS, NEAR BREAKOUT TO INSTRUMENT CLUSTER)
FROM IGNITION SWITCH (DIAGRAM 2 OF 4)
DATC HVAC MODULE
EATC HVAC MODULE
RESTRAINTS CONTROL MODULE (RCM)
REAR HEATED SEAT MODULE
FRONT HEATED SEAT MODULE
PARKING AID MODULE (PAM)
POWER STEERING CONTROL MODULE (PSCM)
FLOOR SHIFTER
INSTRUMENT CLUSTER (IC)
BATTERY JUNCTION BOX (BJB) (LEFT SIDE OF ENGINE COMPT)
FUSE 36 10A
FUSE 35 10A
FUEL PUMP RELAY
FUEL PUMP MOTOR DIODE
FUSE 32 10A
FUSE 34 5A
FUSE 26 5A
FUSE 43 7.5A
(MAIN HARNESS, NEAR BREAKOUT TO SMART JUNCTION BOX)
(DASH PANEL TO HEADLIGHT JUNCTION HARNESS, NEAR BREAKOUT TO ANTI-LOCK BRAKE SYSTEM MODULE)
(DASH PANEL TO HEADLIGHT JUNCTION HARNESS, REAR BREAKOUT TO BATTERY JUNCTION BOX)
(NOT USED)
ALL-WHEEL DRIVE (AWD) MODULE
PASSIVE ANTI-THEFT TRANSCEIVER
PASSENGER AIR BAG DEACTIVATION (PAD) INDICATOR
OCCUPANT CLASSIFICATION SYSTEM MODULE (OCSM)
STABILITY CONTROL SENSOR CLUSTER
STEERING ANGLE SENSOR MODULE (SASM)
ANTI-LOCK BRAKE SYSTEM (ABS) MODULE
POWERTRAIN CONTROL MODULE (PCM)