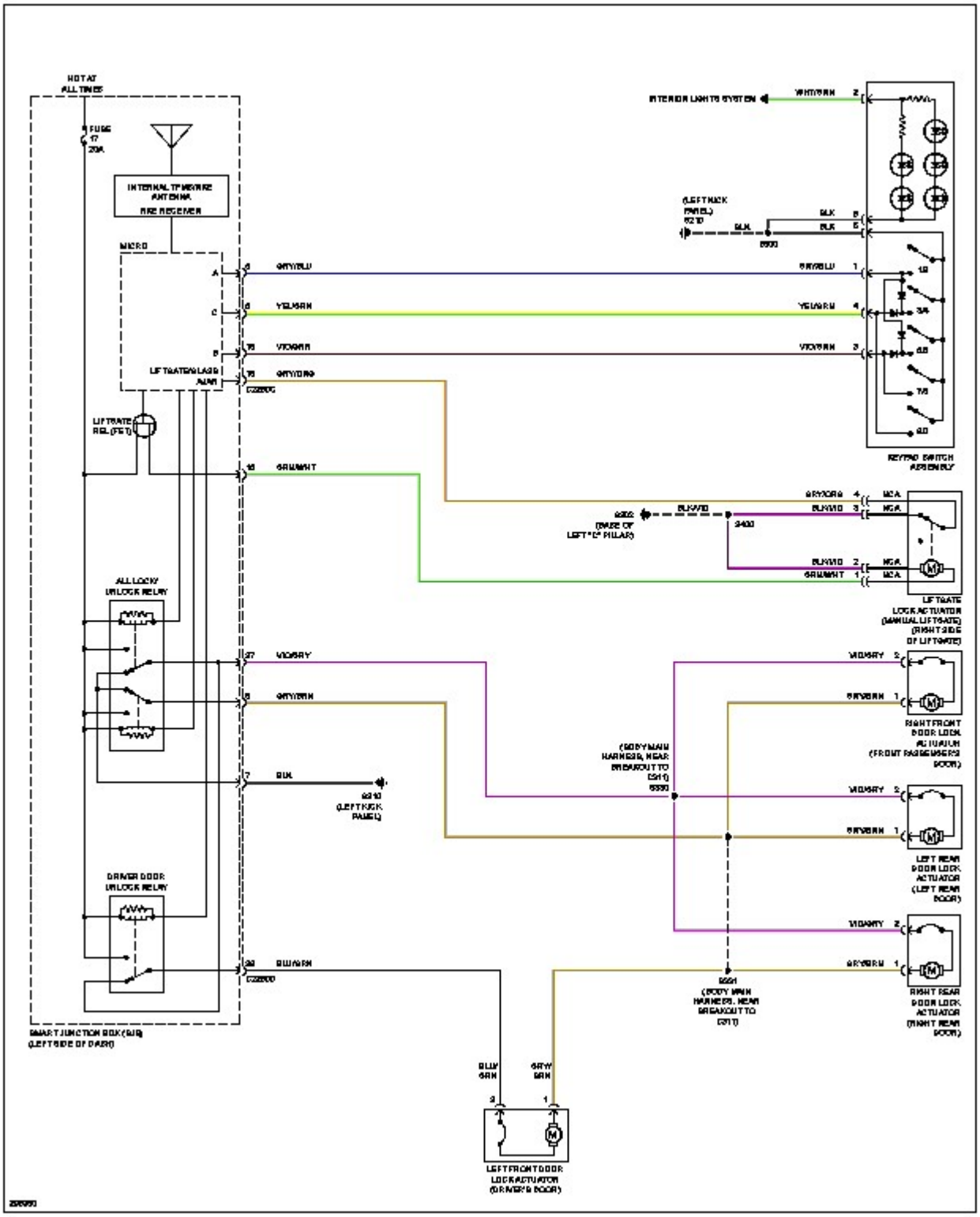

HOT AT ALL TIMES
FUSE 17 20A
INTERNAL TPMS/RKE ANTENNA
RKE RECEIVER
MICRO
LIFTGATE/GLASS AJAR
LIFTGATE REL (FET)
ALL LOCK/ UNLOCK RELAY
DRIVER DOOR UNLOCK RELAY
SMART JUNCTION BOX (SJB) (LEFT SIDE OF DASH)
INTERIOR LIGHTS SYSTEM
(LEFT KICK PANEL) S210
BLK
GRY/BLU
YEL/GRN
VIO/GRN
GRY/ORG
GRN/WHT
VIO/GRY
GRY/BRN
BLK
BLU/GRN
GRY/BRN
KEYPAD SWITCH ASSEMBLY
GRY/ORG
BLK/VIO
GRN/WHT
MCA
(BASE OF LEFT "C" PILLAR)
LIFTGATE LOCK ACTUATOR (MANUAL LIFTGATE) (RIGHT SIDE OF LIFTGATE)
RIGHT FRONT DOOR LOCK ACTUATOR (FRONT PASSENGER'S DOOR)
(BODY MAIN HARNESS, NEAR BREAKOUT TO C311) S330
LEFT REAR DOOR LOCK ACTUATOR (LEFT REAR DOOR)
RIGHT REAR DOOR LOCK ACTUATOR (RIGHT REAR DOOR)
(BODY MAIN HARNESS, NEAR BREAKOUT TO C311)
BLU/GRN
GRY/BRN
LEFT FRONT DOOR LOCK ACTUATOR (DRIVER'S DOOR)