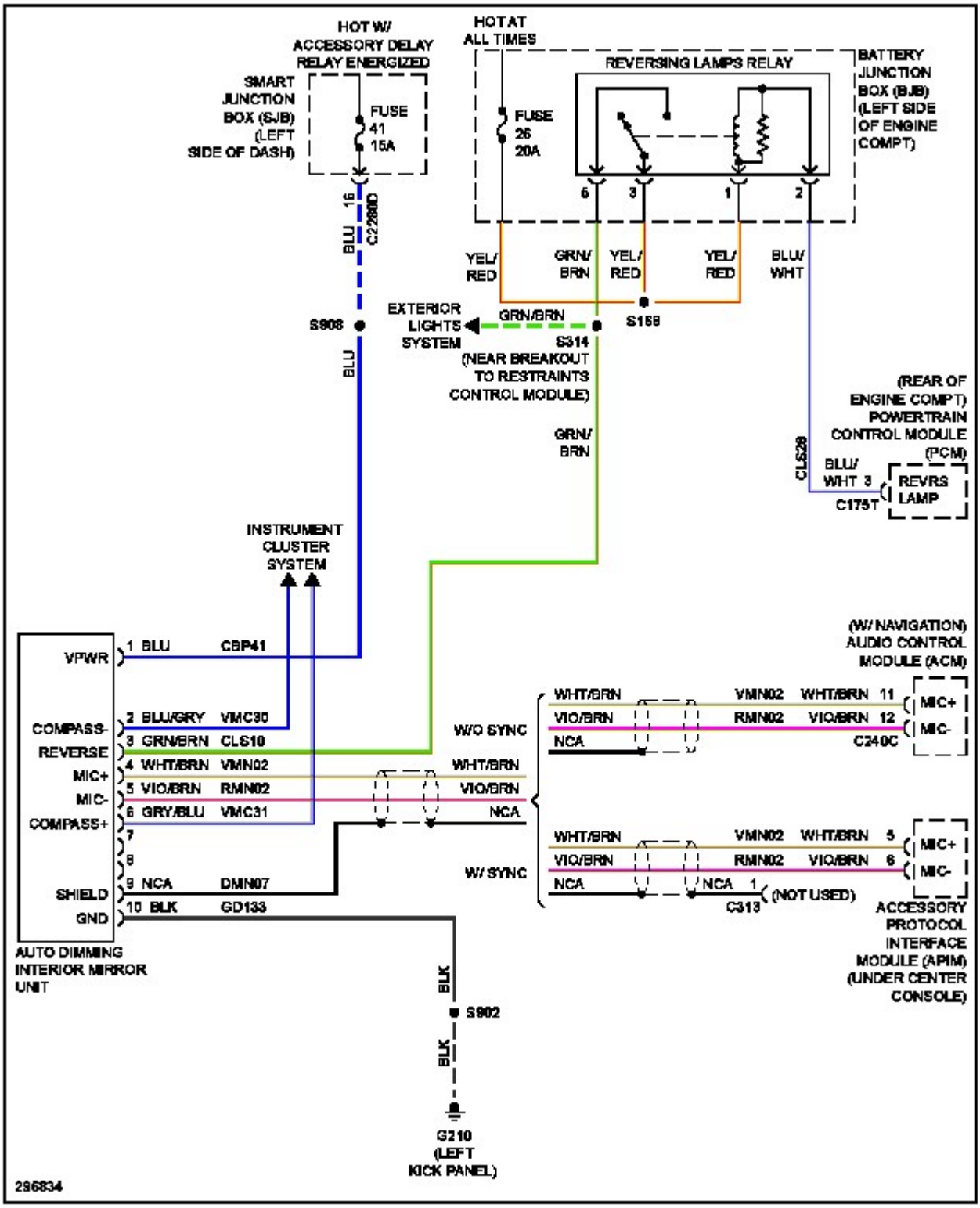
HOT W/ ACCESSORY DELAY RELAY ENERGIZED
SMART JUNCTION BOX (SJB) (LEFT SIDE OF DASH)
FUSE 41 15A
HOT AT ALL TIMES
REVERSING LAMPS RELAY
FUSE 26 20A
BATTERY JUNCTION BOX (BJB) (LEFT SIDE OF ENGINE COMPT)
6 3 1 2
BLU 16 C228D
YEL/RED
GRN/BRN
YEL/RED
YEL/RED
BLU/WHT
EXTERIOR LIGHTS SYSTEM
GRN/BRN
S908
S314
S158
(NEAR BREAKOUT TO RESTRAINTS CONTROL MODULE)
BLU
GRN/BRN
(REAR OF ENGINE COMPT) POWERTRAIN CONTROL MODULE (PCM)
CLS28
BLU/WHT 3
C175T
REVRS LAMP
INSTRUMENT CLUSTER SYSTEM
(W/ NAVIGATION) AUDIO CONTROL MODULE (ACM)
VPWR
1 BLU CBP41
COMPASS-
2 BLU/GRY VMC30
REVERSE
3 GRN/BRN CLS10
MIC+
4 WHT/BRN VMN02
MIC-
5 VIO/BRN RMN02
COMPASS+
6 GRY/BLU VMC31
7
8
SHIELD
9 NCA DMN07
GND
10 BLK GD133
AUTO DIMMING INTERIOR MIRROR UNIT
W/O SYNC
WHT/BRN
VIO/BRN
NCA
WHT/BRN VMN02 WHT/BRN 11 MIC+
VIO/BRN RMN02 VIO/BRN 12 MIC-
NCA
C240C
W/ SYNC
WHT/BRN VMN02 WHT/BRN 5 MIC+
VIO/BRN RMN02 VIO/BRN 6 MIC-
NCA NCA 1 (NOT USED)
C313
ACCESSORY PROTOCOL INTERFACE MODULE (APIM) (UNDER CENTER CONSOLE)
BLK
S902
BLK
G210 (LEFT KICK PANEL)
296834