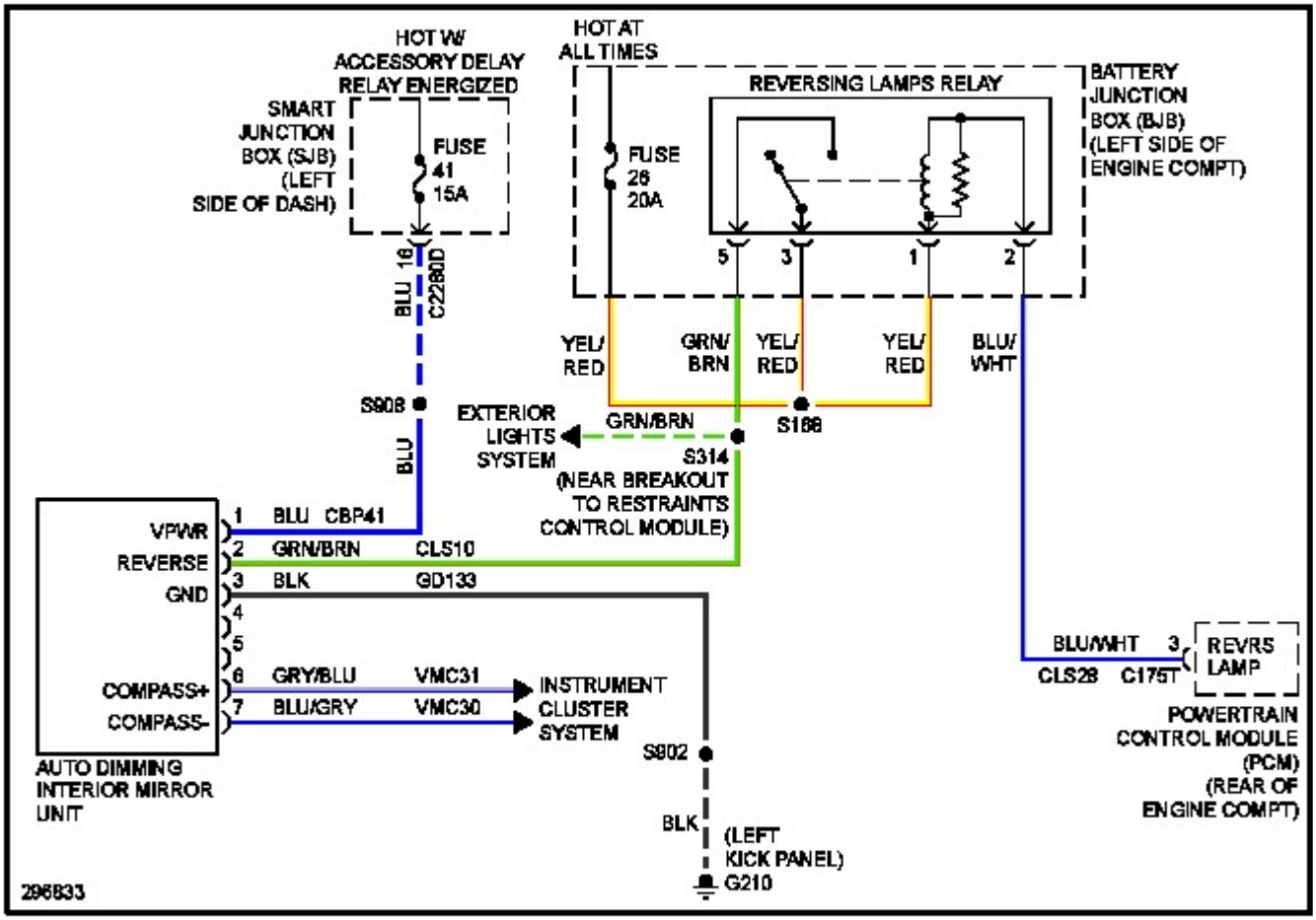
HOT W/
ACCESSORY DELAY
RELAY ENERGIZED
SMART
JUNCTION
BOX (SJB)
(LEFT
SIDE OF DASH)
FUSE
41
15A
HOT AT
ALL TIMES
FUSE
26
20A
REVERSING LAMPS RELAY
BATTERY
JUNCTION
BOX (BJB)
(LEFT SIDE OF
ENGINE COMPT)
5
3
1
2
BLU 16
C2280D
YEL/
RED
GRN/
BRN
YEL/
RED
YEL/
RED
BLU/
WHT
S908
EXTERIOR
LIGHTS
SYSTEM
GRN/BRN
S188
S314
(NEAR BREAKOUT
TO RESTRAINTS
CONTROL MODULE)
BLU
VPWR
REVERSE
GND
1 BLU CBP41
2 GRN/BRN CLS10
3 BLK GD133
4
5
6 GRY/BLU VMC31
7 BLU/GRY VMC30
COMPASS+
COMPASS-
INSTRUMENT
CLUSTER
SYSTEM
AUTO DIMMING
INTERIOR MIRROR
UNIT
S902
BLK
(LEFT
KICK PANEL)
G210
BLU/WHT 3
CLS28 C175T
REVRS
LAMP
POWERTRAIN
CONTROL MODULE
(PCM)
(REAR OF
ENGINE COMPT)
296833