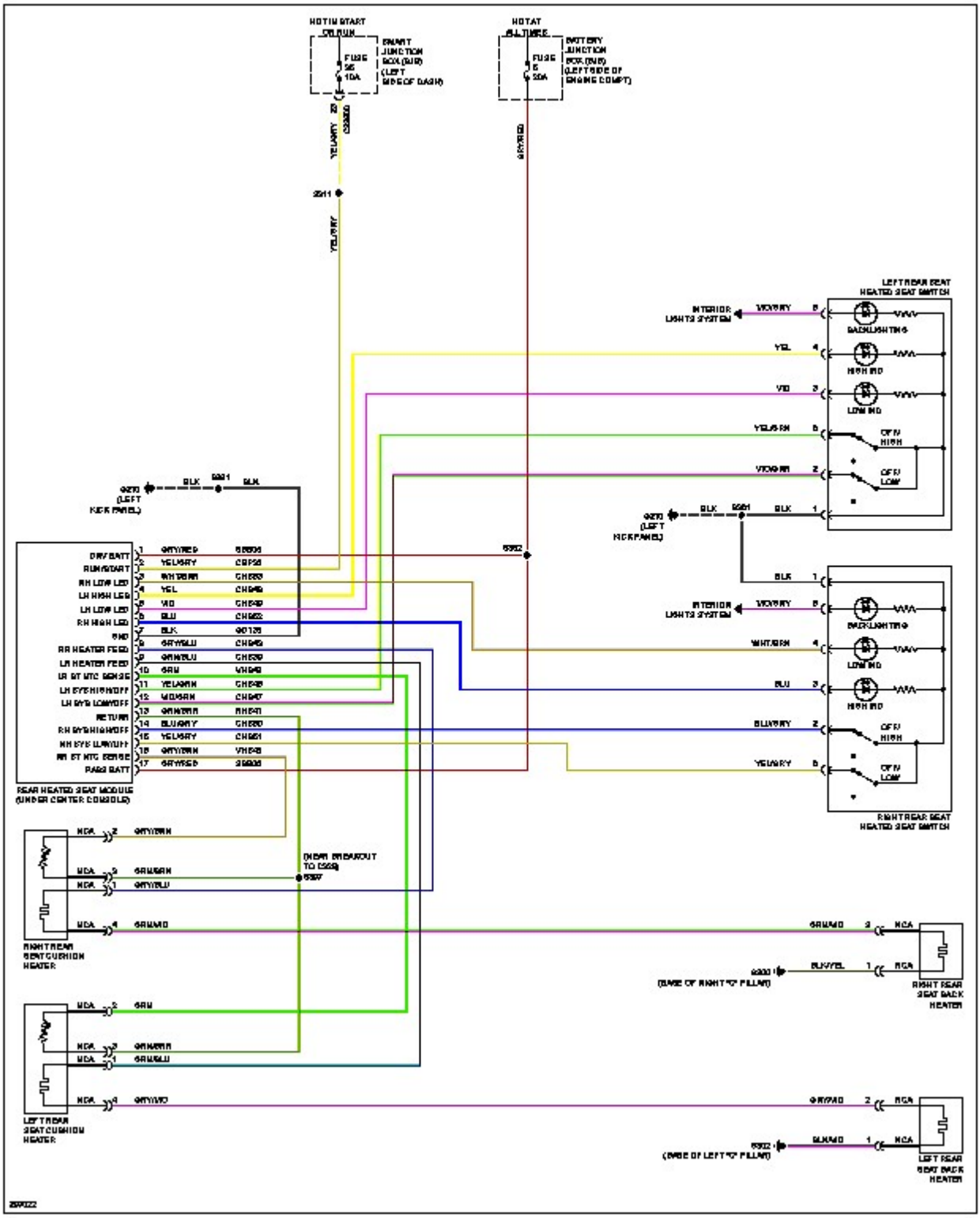

HOT IN START OR RUN
SMART JUNCTION BOX (SJB) (LEFT SIDE OF DASH)
FUSE 25 10A
HOT AT ALL TIMES
BATTERY JUNCTION BOX (BJB) (LEFT SIDE OF ENGINE COMPT)
FUSE 5 20A
YEL/GRY
GRY/RED
LEFT REAR SEAT HEATED SEAT SWITCH
INTERIOR LIGHTS SYSTEM
BACKLIGHTING
HIGH IND
LOW IND
OFF/ HIGH
OFF/ LOW
BLK
(LEFT KICK PANEL)
DRV BATT
RUN/START
RH LOW LED
LH HIGH LED
LH LOW LED
RH HIGH LED
GND
RR HEATER FEED
LH HEATER FEED
LH ST MTC SENSE
LH SYS HIGH/OFF
LH SYS LOW/OFF
RETURN
RH SYS HIGH/OFF
RH SYS LOW/OFF
RH ST MTC SENSE
PASS BATT
REAR HEATED SEAT MODULE (UNDER CENTER CONSOLE)
RIGHT REAR SEAT HEATED SEAT SWITCH
NCA
(NEAR BREAKOUT TO CSSB)
RIGHT REAR SEAT CUSHION HEATER
(BASE OF RIGHT "C" PILLAR)
RIGHT REAR SEAT BACK HEATER
LEFT REAR SEAT CUSHION HEATER
(BASE OF LEFT "C" PILLAR)
LEFT REAR SEAT BACK HEATER