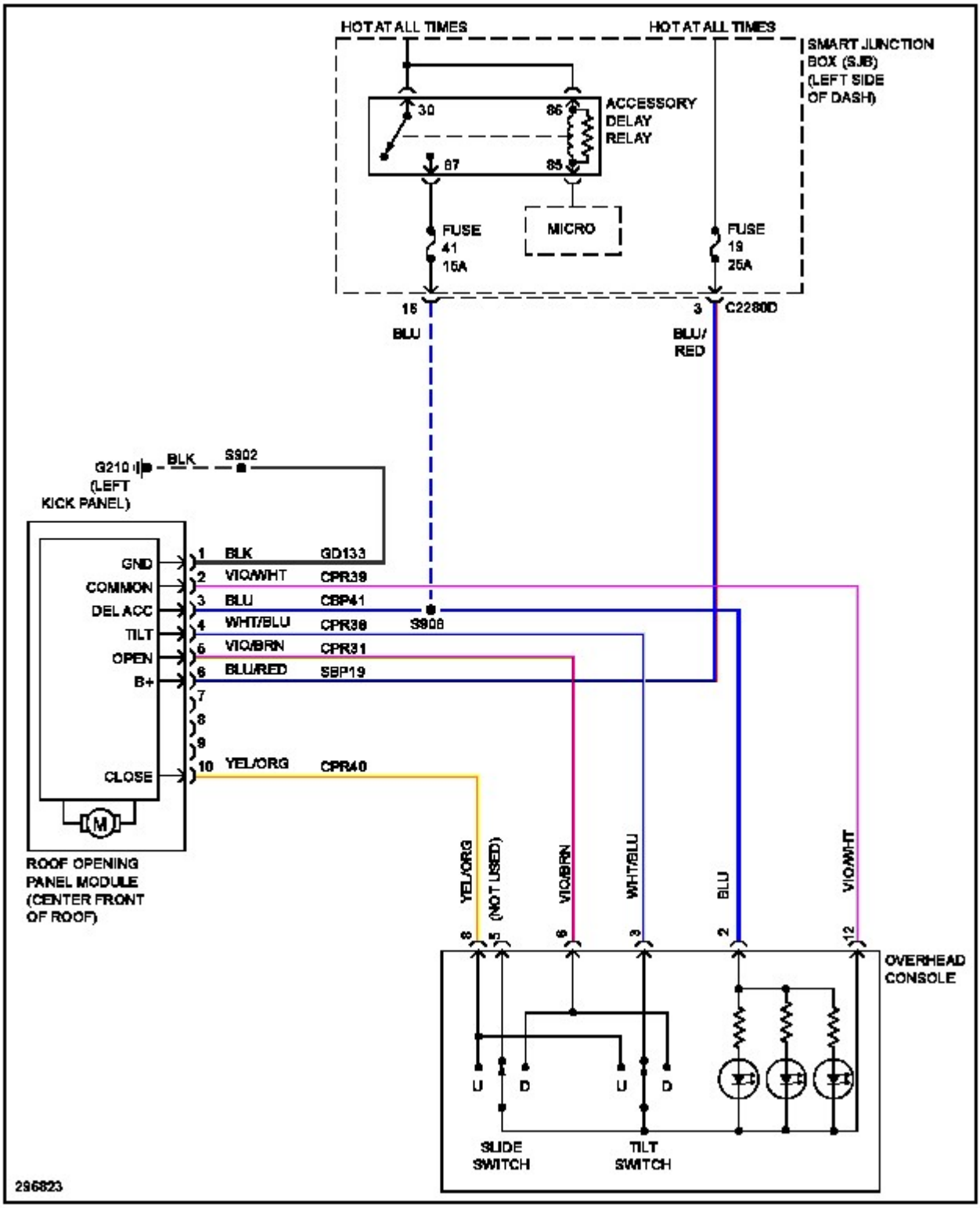
HOT AT ALL TIMES
HOT AT ALL TIMES
SMART JUNCTION BOX (SJB) (LEFT SIDE OF DASH)
30
86
87
85
ACCESSORY DELAY RELAY
MICRO
FUSE 41 15A
FUSE 19 25A
15
3
C2280D
BLU
BLU/RED
G210
(LEFT KICK PANEL)
BLK
S902
S908
GND
COMMON
DEL ACC
TILT
OPEN
B+
CLOSE
1 BLK GD133
2 VIO/WHT CPR39
3 BLU CBP41
4 WHT/BLU CPR38
5 VIO/BRN CPR31
6 BLU/RED SBP19
7
8
9
10 YEL/ORG CPR40
ROOF OPENING PANEL MODULE (CENTER FRONT OF ROOF)
YEL/ORG
(NOT USED)
VIO/BRN
WHT/BLU
BLU
VIO/WHT
8
5
6
3
2
12
OVERHEAD CONSOLE
U
D
U
D
SLIDE SWITCH
TILT SWITCH
296823