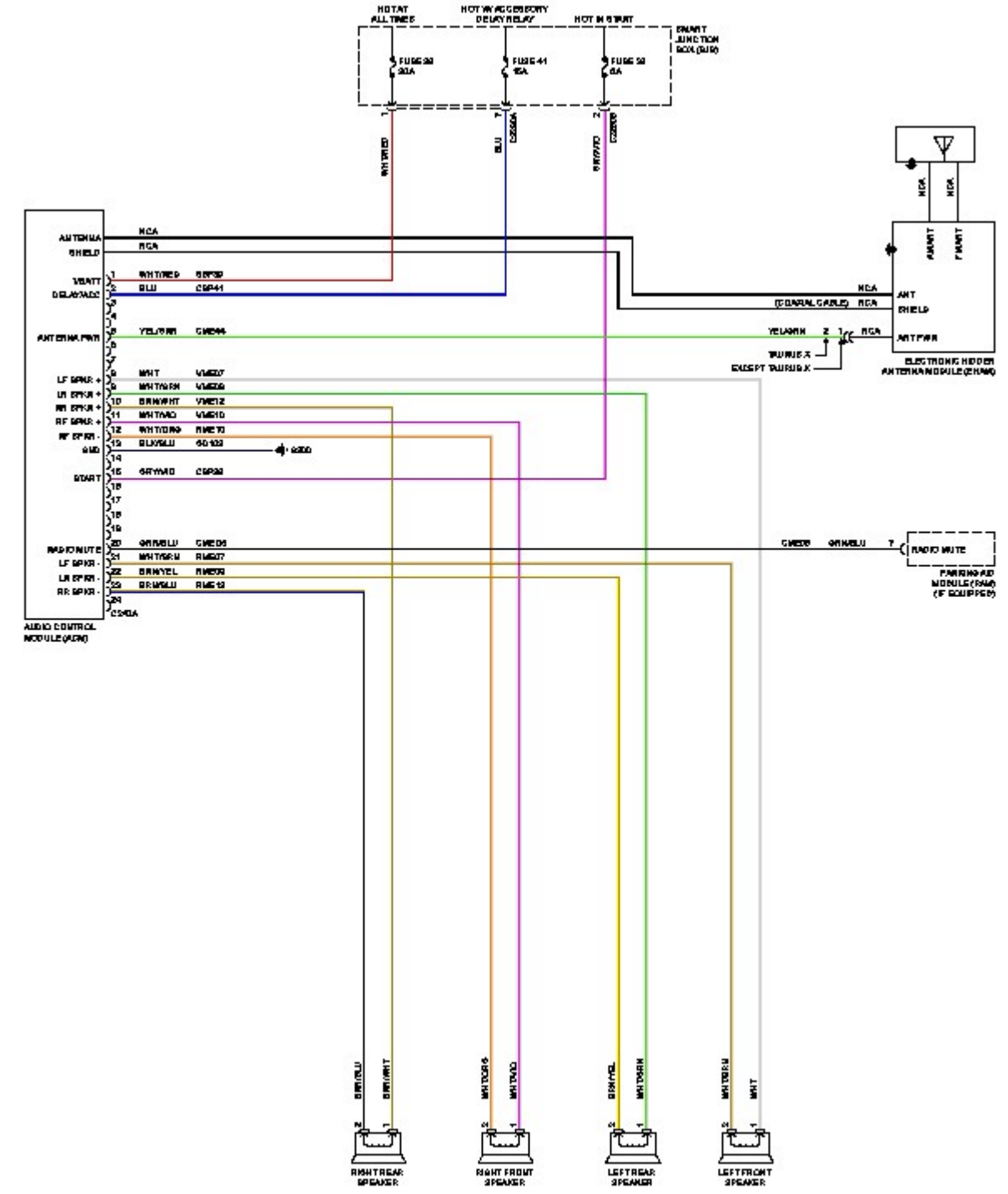
HOT AT ALL TIMES
HOT W/ ACCESSORY DELAY RELAY
HOT IN START
SMART JUNCTION BOX (SJB)
FUSE 39 30A
FUSE 41 15A
FUSE 38 5A
WHT/RED
BLU
GRY/VIO
ANTENNA
SHIELD
VBATT
DELAY/ACC
ANTENNA PWR
LF SPKR +
LR SPKR +
RR SPKR +
RF SPKR +
RF SPKR -
GND
START
RADIO MUTE
LF SPKR -
LR SPKR -
RR SPKR -
AUDIO CONTROL MODULE (ACM)
NCA
RCA
ANT
SHIELD
ANT PWR
(COAXIAL CABLE)
YEL/GRN
TAURUS X
EXCEPT TAURUS X
ELECTRONIC HIDDEN ANTENNA MODULE (EHAM)
RADIO MUTE
PARKING AID MODULE (PAM) (IF EQUIPPED)
BRN/BLU
BRN/WHT
WHT/ORG
WHT/VIO
BRN/YEL
WHT/GRN
WHT
RIGHT REAR SPEAKER
RIGHT FRONT SPEAKER
LEFT REAR SPEAKER
LEFT FRONT SPEAKER