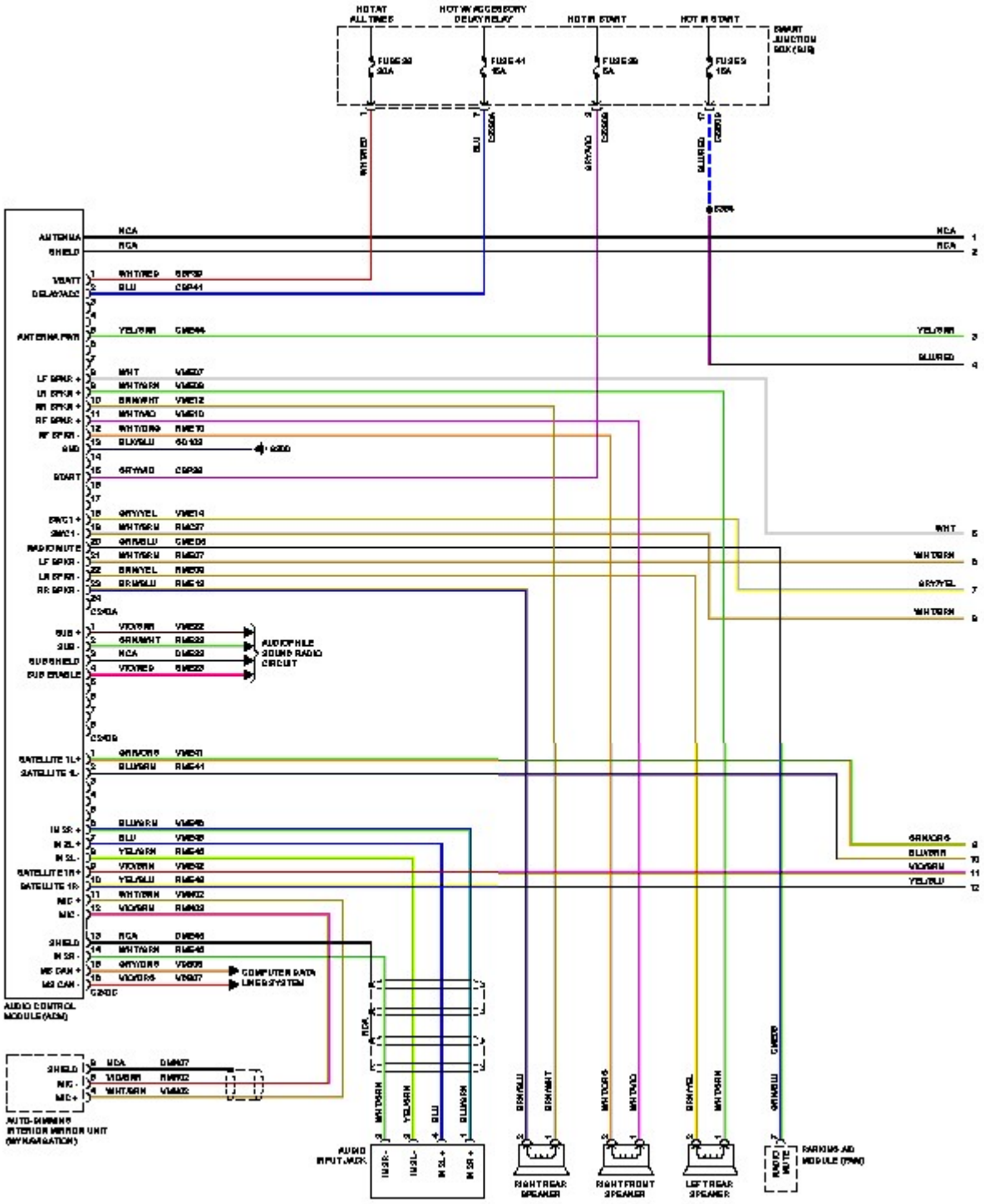
HOT AT ALL TIMES
HOT W/ACCESSORY DELAY RELAY
HOT IN START
HOT IN START
SMART JUNCTION BOX (SJB)
AUDIO CONTROL MODULE (ACM)
AUTO-DIMMING INTERIOR MIRROR UNIT (W/NAVIGATION)
AUDIO INPUT JACK
RIGHT REAR SPEAKER
RIGHT FRONT SPEAKER
LEFT REAR SPEAKER
PARKING AID MODULE (PAM)
AUDIOPHILE SOUND RADIO CIRCUIT
COMPUTER DATA LINE SYSTEM