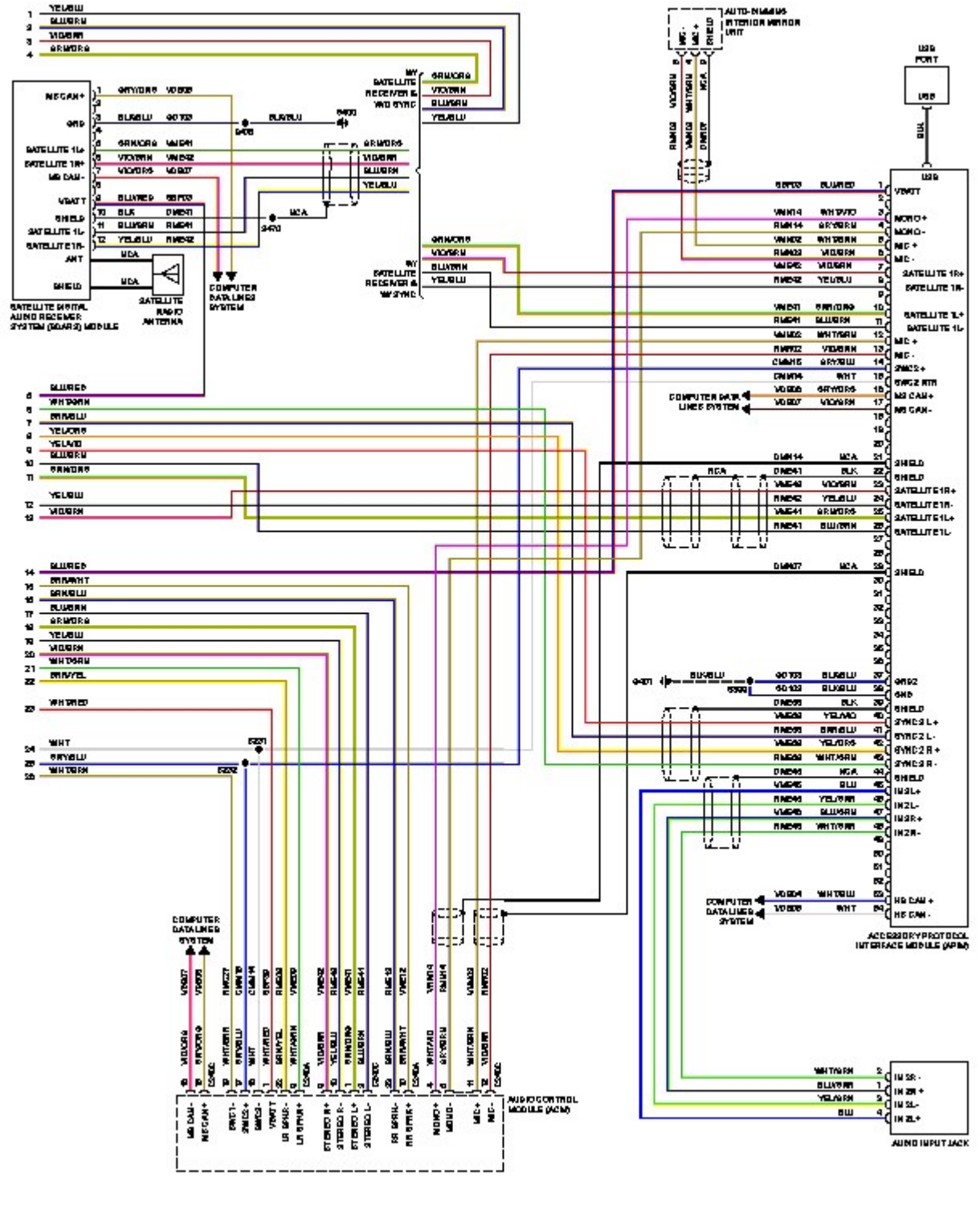

SATELLITE DIGITAL AUDIO RECEIVER SYSTEM (SDARS) MODULE
SATELLITE RADIO ANTENNA
COMPUTER DATALINES SYSTEM
AUTO-DIMMING INTERIOR MIRROR UNIT
USB PORT
USB
COMPUTER DATA LINES SYSTEM
ACCESSORY PROTOCOL INTERFACE MODULE (APIM)
AUDIO INPUT JACK
AUDIO CONTROL MODULE (ACM)