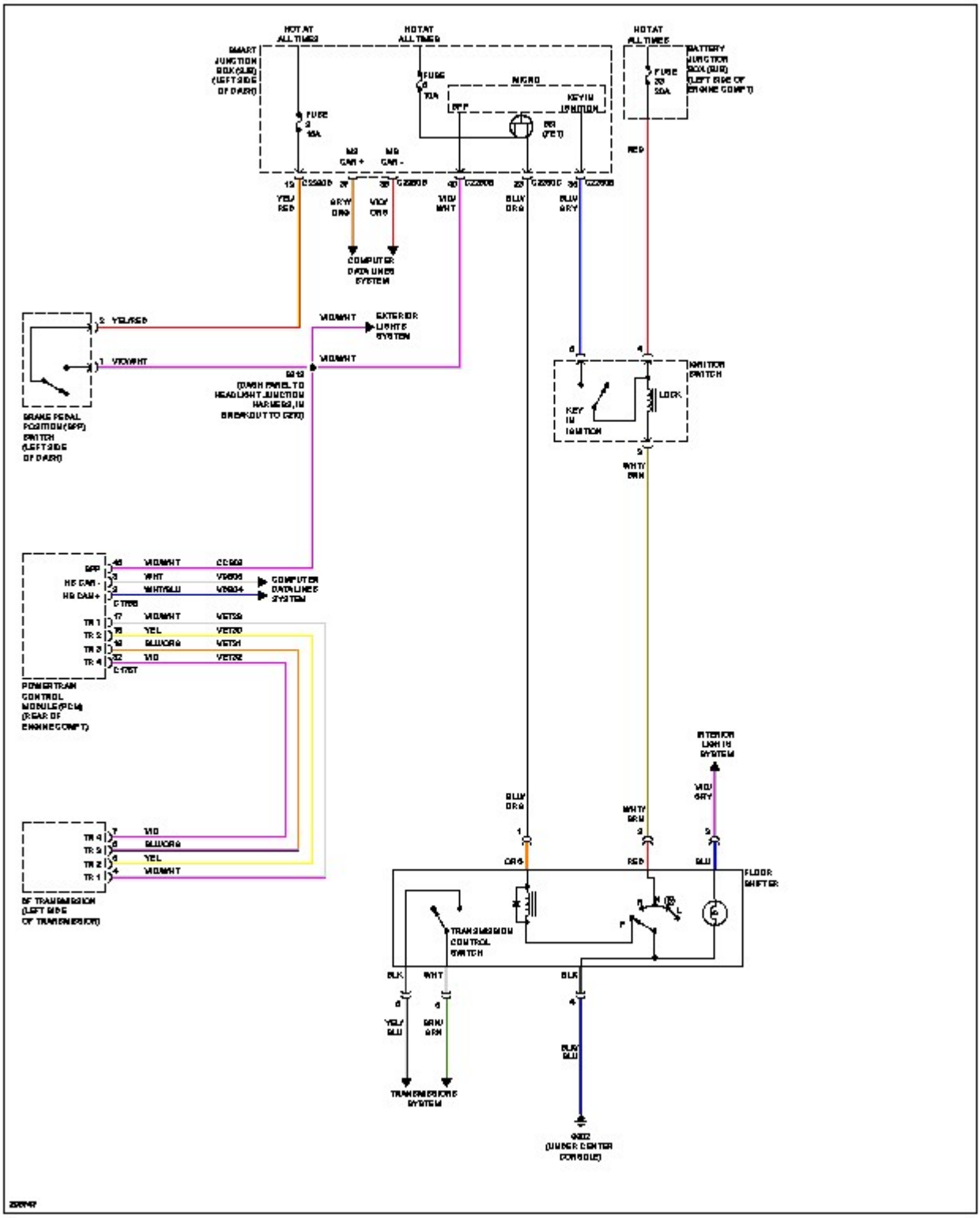

HOT AT ALL TIMES
HOT AT ALL TIMES
HOT AT ALL TIMES
SMART JUNCTION BOX (SJB) (LEFT SIDE OF DASH)
FUSE 6 10A
FUSE 3 10A
MICRO
KEY IN IGNITION
BATTERY JUNCTION BOX (BJB) (LEFT SIDE OF ENGINE COMPT)
FUSE 33 20A
RED
MS CAN +
MS CAN -
YEL/RED
GRY/ORG
VIO/ORG
VIO/WHT
BLU/ORG
BLU/GRY
COMPUTER DATA LINES SYSTEM
YEL/RED
VIO/WHT
VIO/WHT
EXTERIOR LIGHTS SYSTEM
VIO/WHT
(DASH PANEL TO HEADLIGHT JUNCTION HARNESS, IN BREAKOUT TO C270)
BRAKE PEDAL POSITION (BPP) SWITCH (LEFT SIDE OF DASH)
IGNITION SWITCH
LOCK
KEY IN IGNITION
WHT/BRN
BPP
HS CAN -
HS CAN +
VIO/WHT
WHT
WHT/BLU
COMPUTER DATA LINES SYSTEM
TR 1
TR 2
TR 3
TR 4
VIO/WHT
YEL
BLU/ORG
VIO
POWERTRAIN CONTROL MODULE (PCM) (REAR OF ENGINE COMPT)
INTERIOR LIGHTS SYSTEM
VIO/GRY
BLU/ORG
WHT/BRN
ORG
RED
BLU
FLOOR SHIFTER
TR 4
TR 3
TR 2
TR 1
VIO
BLU/ORG
YEL
VIO/WHT
BF TRANSMISSION (LEFT SIDE OF TRANSMISSION)
TRANSMISSION CONTROL SWITCH
BLK
WHT
BLK
YEL/BLU
BRN/BRN
BLK/BLU
TRANSMISSIONS SYSTEM
(UNDER CENTER CONSOLE)