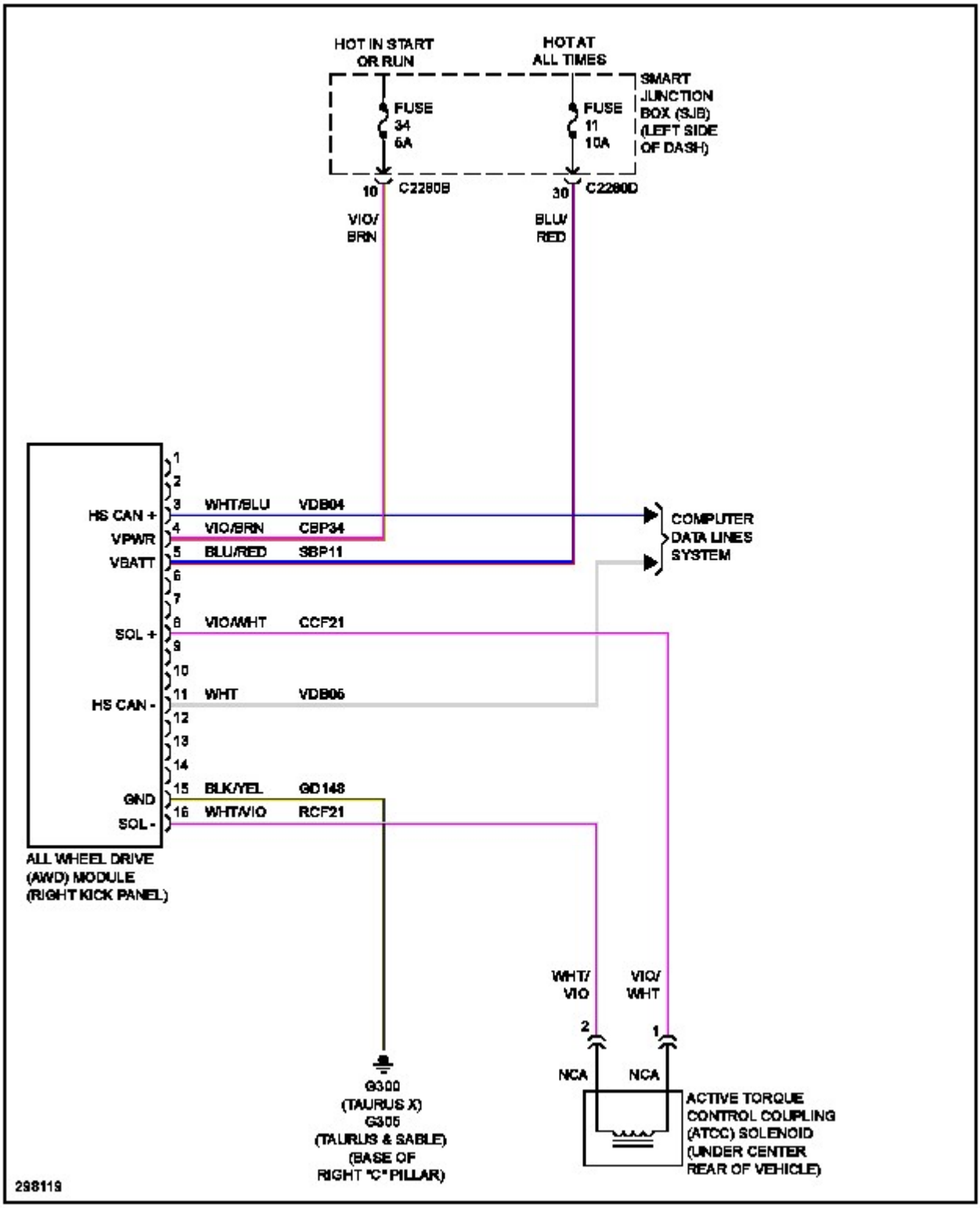
HOT IN START OR RUN
HOT AT ALL TIMES
SMART JUNCTION BOX (SJB) (LEFT SIDE OF DASH)
FUSE 34 6A
FUSE 11 10A
10
C2280B
30
C2280D
VIO/BRN
BLU/RED
HS CAN +
VPWR
VBATT
SOL +
HS CAN -
GND
SOL -
1
2
3 WHT/BLU VDB04
4 VIO/BRN CBP34
5 BLU/RED SBP11
6
7
8 VIO/WHT CCF21
9
10
11 WHT VDB05
12
13
14
15 BLK/YEL GD148
16 WHT/VIO RCF21
COMPUTER DATA LINES SYSTEM
ALL WHEEL DRIVE (AWD) MODULE (RIGHT KICK PANEL)
WHT/VIO
VIO/WHT
2
1
NCA
NCA
G300 (TAURUS X) G305 (TAURUS & SABLE) (BASE OF RIGHT "C" PILLAR)
ACTIVE TORQUE CONTROL COUPLING (ATCC) SOLENOID (UNDER CENTER REAR OF VEHICLE)
298119