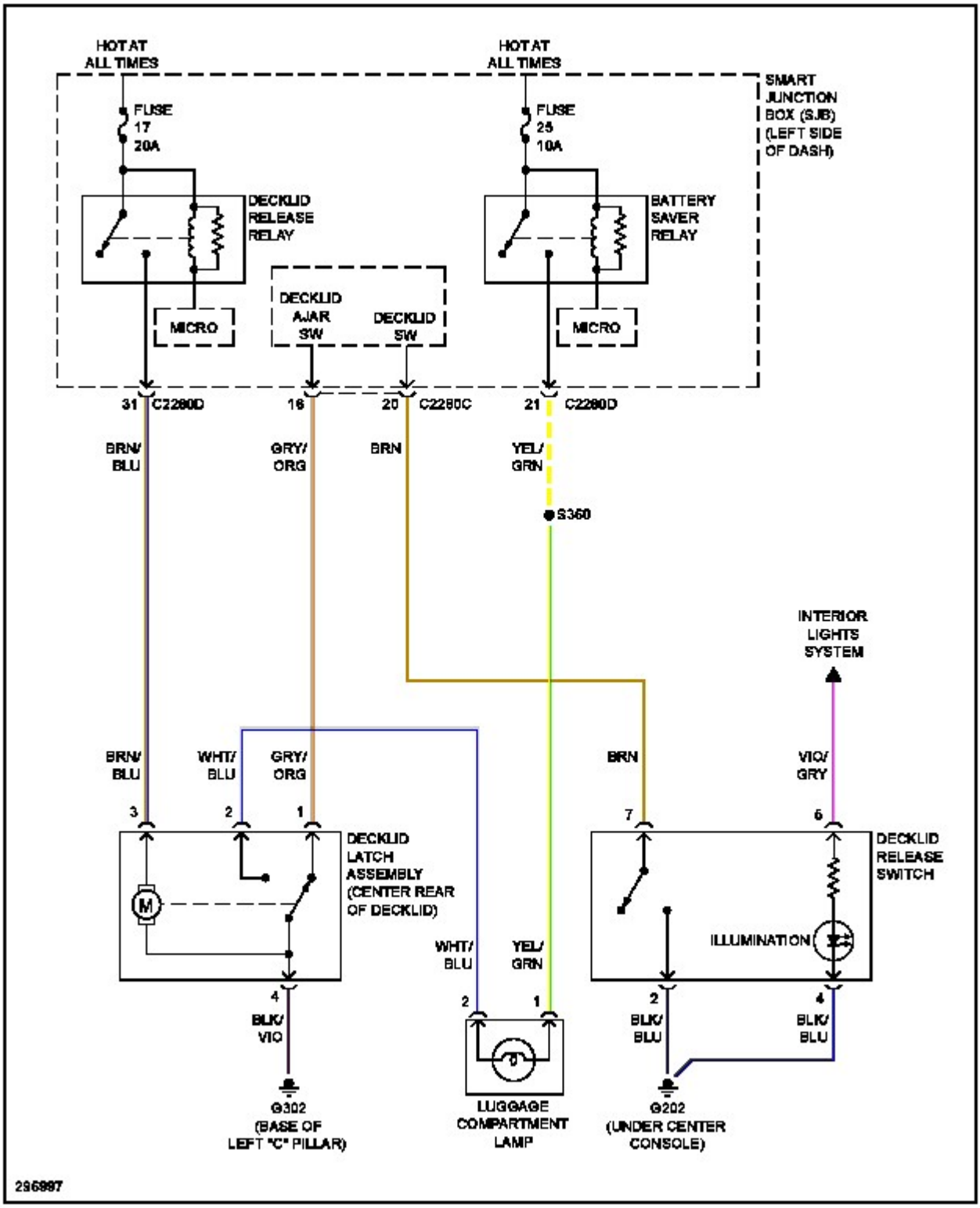
HOT AT ALL TIMES
HOT AT ALL TIMES
SMART JUNCTION BOX (SJB) (LEFT SIDE OF DASH)
FUSE 17 20A
FUSE 25 10A
DECKLID RELEASE RELAY
BATTERY SAVER RELAY
MICRO
DECKLID AJAR SW
DECKLID SW
MICRO
31 C2280D
16
20 C2280C
21 C2280D
BRN/ BLU
GRY/ ORG
BRN
YEL/ GRN
S360
INTERIOR LIGHTS SYSTEM
BRN/ BLU
WHT/ BLU
GRY/ ORG
BRN
VIO/ GRY
3
2
1
7
6
DECKLID LATCH ASSEMBLY (CENTER REAR OF DECKLID)
DECKLID RELEASE SWITCH
ILLUMINATION
WHT/ BLU
YEL/ GRN
4
2
1
2
4
BLK/ VIO
BLK/ BLU
BLK/ BLU
G302 (BASE OF LEFT "C" PILLAR)
LUGGAGE COMPARTMENT LAMP
G202 (UNDER CENTER CONSOLE)
296997