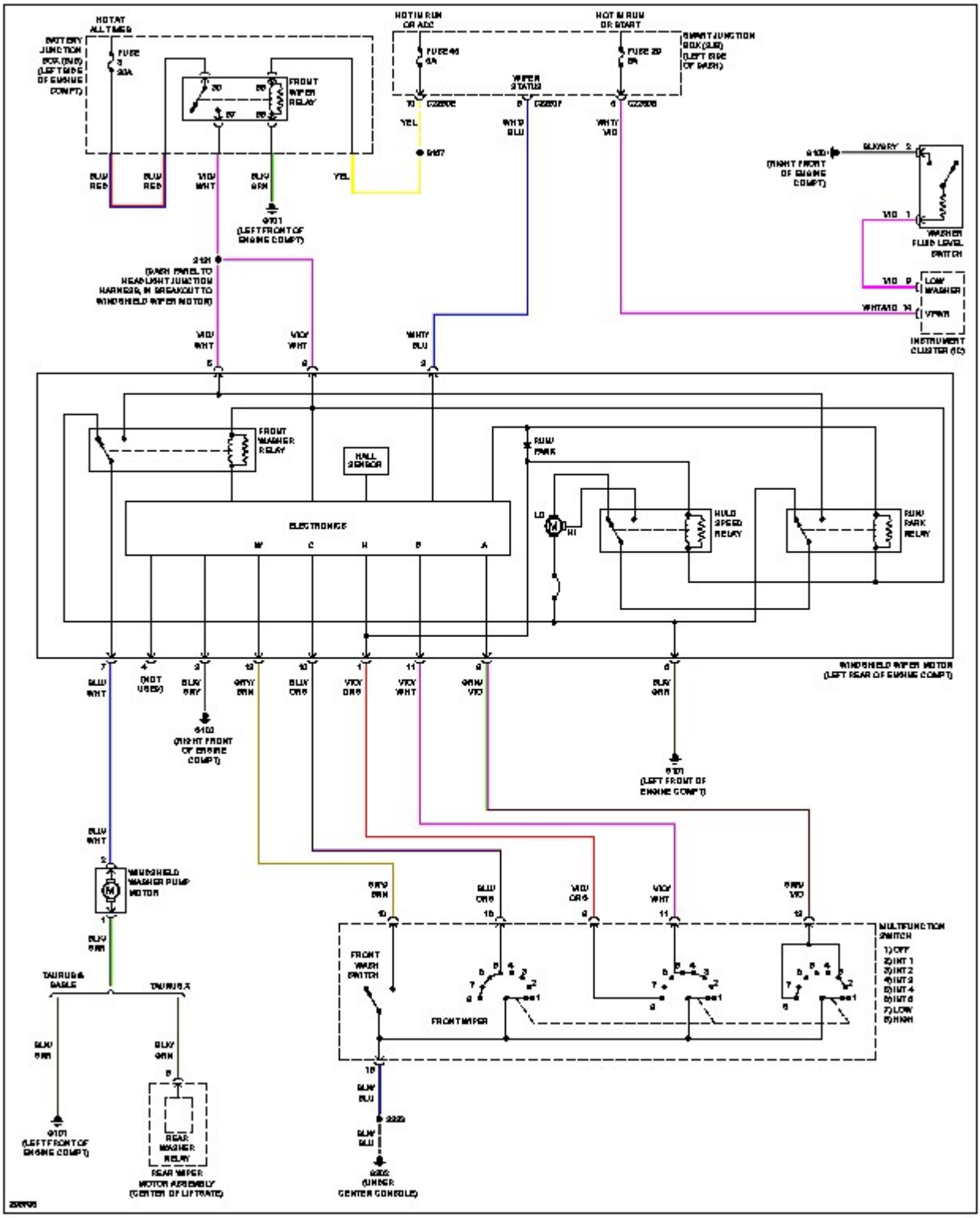

HOT AT ALL TIMES
BATTERY JUNCTION BOX (BJB) (LEFT SIDE OF ENGINE COMPT)
FUSE 3 20A
FRONT WIPER RELAY
HOT IN RUN OR ACC
FUSE 46 6A
HOT IN RUN OR START
FUSE 29 5A
SMART JUNCTION BOX (SJB) (LEFT SIDE OF DASH)
WIPER STATUS
YEL
WHT/BLU
WHT/VIO
BLK/RED
BLK/RED
VIO/WHT
BLK/GRN
YEL
G101 (LEFT FRONT OF ENGINE COMPT)
G100 (RIGHT FRONT OF ENGINE COMPT)
BLK/GRY
VIO
WASHER FLUID LEVEL SWITCH
LOW WASHER
VFWR
INSTRUMENT CLUSTER (IC)
S121 (DASH PANEL TO HEADLIGHT JUNCTION HARNESS, IN BREAKOUT TO WINDSHIELD WIPER MOTOR)
VIO/WHT
VIO/WHT
WHT/BLU
FRONT WASHER RELAY
HALL SENSOR
RUN/PARK
ELECTRONICS
W
C
H
B
A
LO
HI
HULD SPEED RELAY
RUN/PARK RELAY
WINDSHIELD WIPER MOTOR (LEFT REAR OF ENGINE COMPT)
BLK/WHT
(NOT USED)
BLK/GRY
GRY/GRN
BLK/ORG
VIO/ORG
VIO/WHT
GRN/VIO
BLK/GRN
G100 (RIGHT FRONT OF ENGINE COMPT)
G101 (LEFT FRONT OF ENGINE COMPT)
BLK/WHT
WINDSHIELD WASHER PUMP MOTOR
BLK/GRN
TAURUS & SABLE
TAURUS X
BLK/GRN
BLK/GRN
G101 (LEFT FRONT OF ENGINE COMPT)
REAR WASHER RELAY
REAR WIPER MOTOR ASSEMBLY (CENTER OF LIFTGATE)
GRY/GRN
BLK/ORG
VIO/ORG
VIO/WHT
GRN/VIO
FRONT WASH SWITCH
FRONT WIPER
MULTIFUNCTION SWITCH
1) OFF
2) INT 1
3) INT 2
4) INT 3
5) INT 4
6) INT 5
7) LOW
8) HIGH
BLK/BLU
S222
BLK/BLU
G202 (UNDER CENTER CONSOLE)