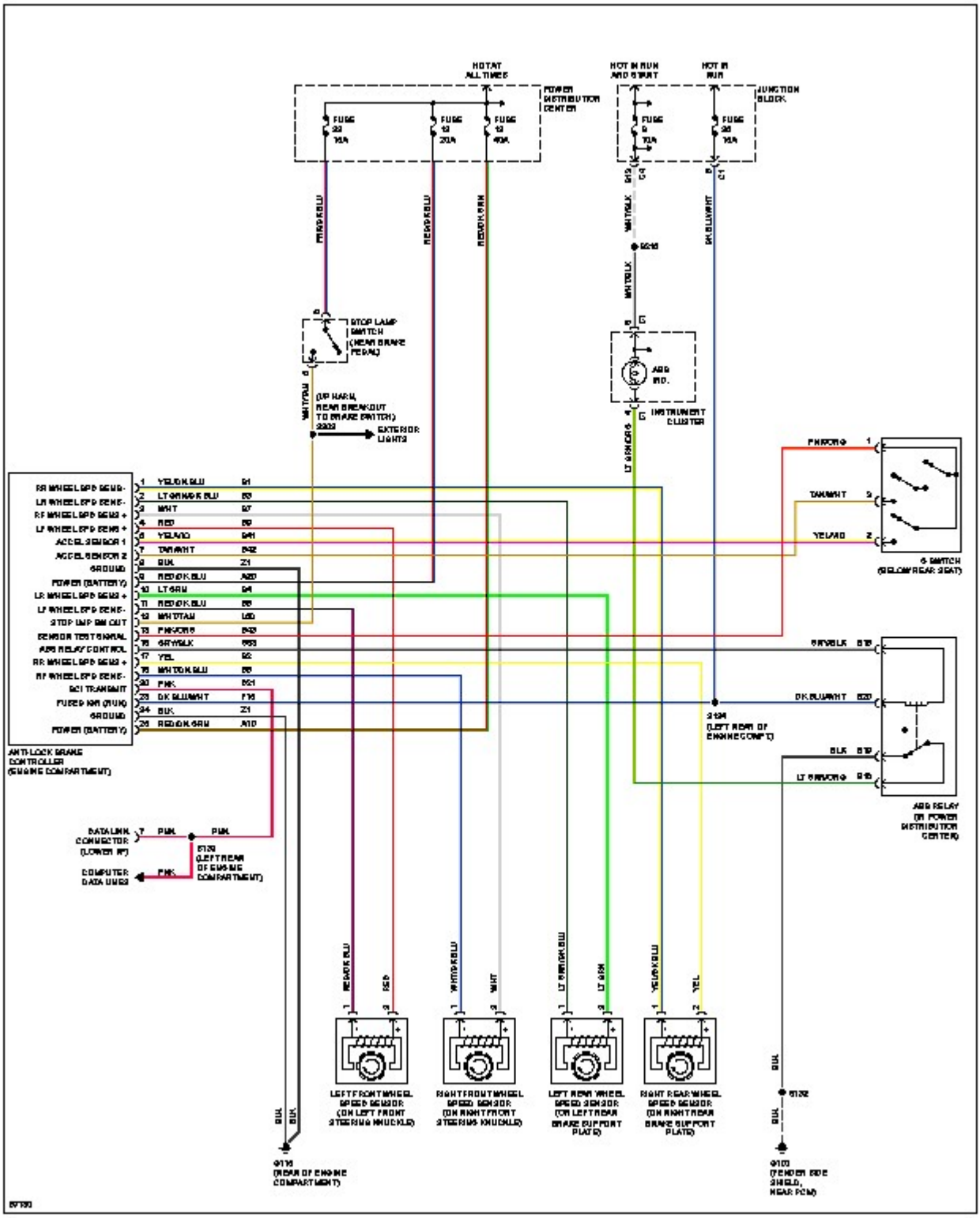
HOT AT ALL TIMES
POWER DISTRIBUTION CENTER
HOT IN RUN AND START
HOT IN RUN
JUNCTION BLOCK
FUSE 22 10A
FUSE 13 20A
FUSE 13 40A
FUSE 9 10A
FUSE 26 10A
STOP LAMP SWITCH (NEAR BRAKE PEDAL)
ABS IND.
INSTRUMENT CLUSTER
(UP HARN, NEAR BREAKOUT TO BRAKE SWITCH) S203
EXTERIOR LIGHTS
FR WHEEL SPD SENS-
LR WHEEL SPD SENS-
RF WHEEL SPD SENS +
LF WHEEL SPD SENS +
ACCEL SENSOR 1
ACCEL SENSOR 2
GROUND
POWER (BATTERY)
LR WHEEL SPD SENS +
LF WHEEL SPD SENS-
STOP LMP SW OUT
SENSOR TEST SIGNAL
ABS RELAY CONTROL
RR WHEEL SPD SENS +
RF WHEEL SPD SENS-
SCI TRANSMIT
FUSED KAM (RUN)
GROUND
POWER (BATTERY)
ANTI-LOCK BRAKE CONTROLLER (ENGINE COMPARTMENT)
6-SWITCH (BELOW REAR SEAT)
ABS RELAY (IN POWER DISTRIBUTION CENTER)
S134 (LEFT REAR OF ENGINE COMPT)
DATALINK CONNECTOR (LOWER RF)
S129 (LEFT REAR OF ENGINE COMPARTMENT)
COMPUTER DATA LINES
LEFT FRONT WHEEL SPEED SENSOR (ON LEFT FRONT STEERING KNUCKLE)
RIGHT FRONT WHEEL SPEED SENSOR (ON RIGHT FRONT STEERING KNUCKLE)
LEFT REAR WHEEL SPEED SENSOR (ON LEFT REAR BRAKE SUPPORT PLATE)
RIGHT REAR WHEEL SPEED SENSOR (ON RIGHT REAR BRAKE SUPPORT PLATE)
G116 (REAR OF ENGINE COMPARTMENT)
G102
G103 (FENDER SIDE SHIELD, NEAR PCM)