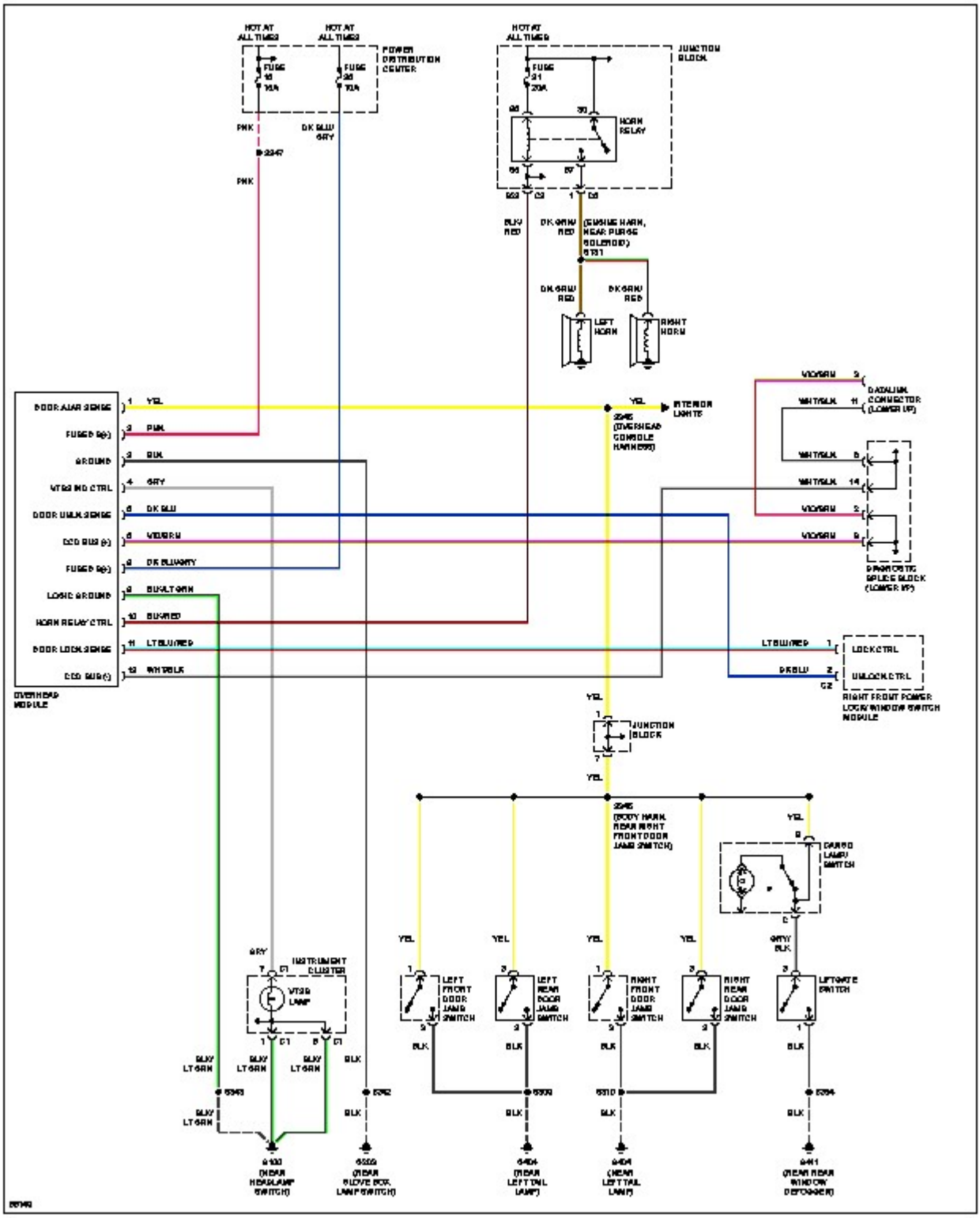

HOT AT ALL TIMES
HOT AT ALL TIMES
POWER DISTRIBUTION CENTER
FUSE 16 10A
FUSE 26 10A
PNK
DK BLU/GRY
PNK
HOT AT ALL TIMES
JUNCTION BLOCK
FUSE 21 20A
HORN RELAY
BLK/RED
DK GRN/RED
(ENGINE HARN, NEAR PURGE SOLENOID)
DK GRN/RED
DK GRN/RED
LEFT HORN
RIGHT HORN
DOOR AJAR SENSE
FUSED B(+)
GROUND
VTSS IND CTRL
DOOR UNLK SENSE
CCD BUS (+)
FUSED B(+)
LOGIC GROUND
HORN RELAY CTRL
DOOR LOCK SENSE
CCD BUS (-)
OVERHEAD MODULE
YEL
PNK
BLK
GRY
DK BLU
VIO/BRN
DK BLU/GRY
BLK/LT GRN
BLK/RED
LT BLU/RED
WHT/BLK
YEL
INTERIOR LIGHTS
(OVERHEAD CONSOLE HARNESS)
VIO/BRN
WHT/BLK
DATALINK CONNECTOR (LOWER I/P)
WHT/BLK
WHT/BLK
VIO/BRN
VIO/BRN
DIAGNOSTIC SPLICE BLOCK (LOWER I/P)
LT BLU/RED
DK BLU
LOCK CTRL
UNLOCK CTRL
RIGHT FRONT POWER LOCK/WINDOW SWITCH MODULE
YEL
JUNCTION BLOCK
YEL
(BODY HARN, REAR RIGHT FRONT DOOR JAMB SWITCH)
YEL
CARGO LAMP SWITCH
GRY
INSTRUMENT CLUSTER
VTSS LAMP
YEL
YEL
YEL
YEL
GRY/BLK
LEFT FRONT DOOR JAMB SWITCH
LEFT REAR DOOR JAMB SWITCH
RIGHT FRONT DOOR JAMB SWITCH
RIGHT REAR DOOR JAMB SWITCH
LIFTGATE SWITCH
BLK
BLK
BLK
BLK
BLK/LT GRN
BLK/LT GRN
BLK/LT GRN
BLK
BLK
BLK
BLK
BLK
(NEAR HEADLAMP SWITCH)
(NEAR GLOVE BOX LAMP SWITCH)
(NEAR LEFT TAIL LAMP)
(NEAR LEFT TAIL LAMP)
(NEAR REAR WINDOW DEFOGGER)