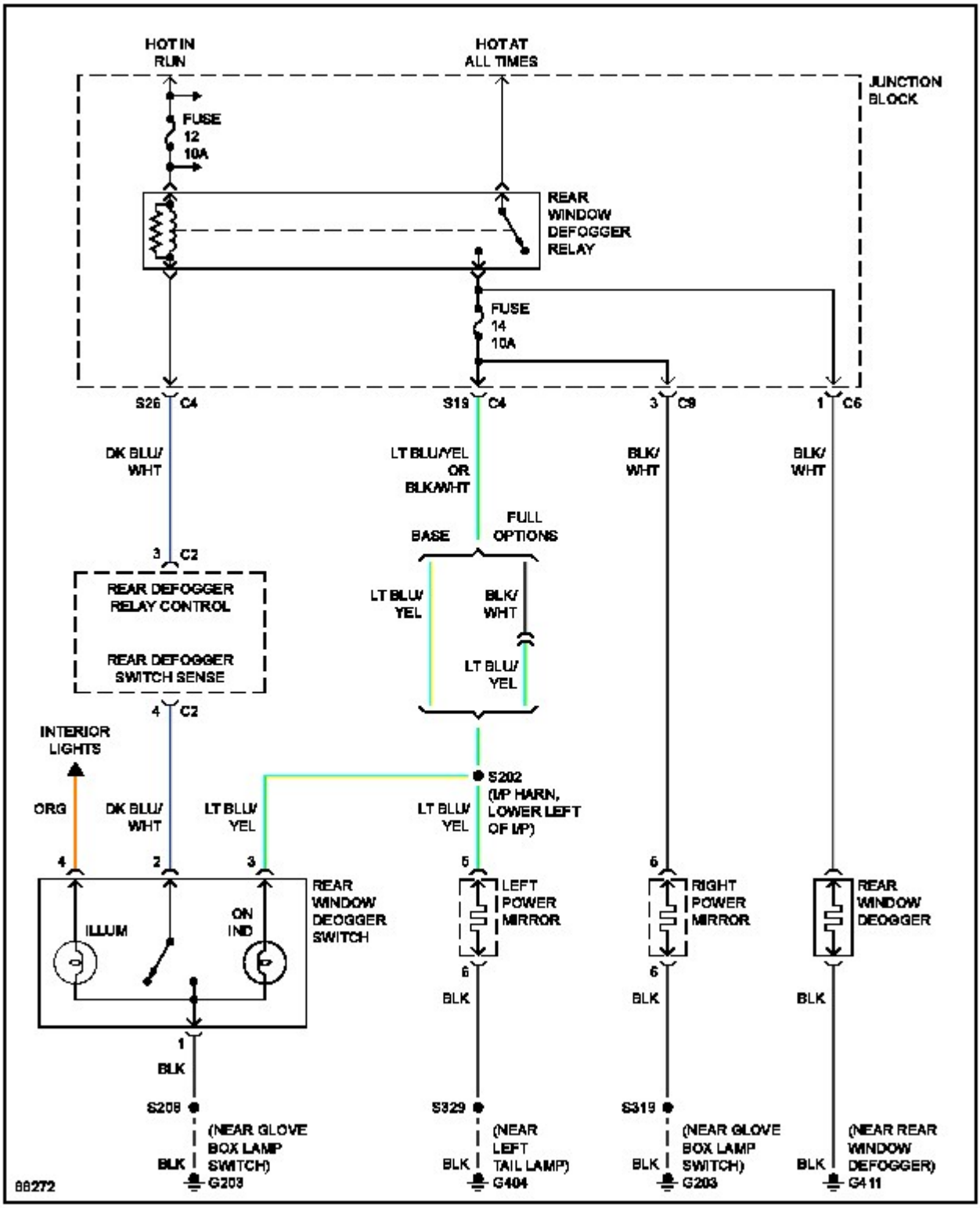
HOT IN RUN
HOT AT ALL TIMES
JUNCTION BLOCK
FUSE 12 10A
REAR WINDOW DEFOGGER RELAY
FUSE 14 10A
S26 C4
S19 C4
3 C9
1 C6
DK BLU/ WHT
LT BLU/YEL OR BLK/WHT
BLK/ WHT
BLK/ WHT
BASE
FULL OPTIONS
3 C2
REAR DEFOGGER RELAY CONTROL
REAR DEFOGGER SWITCH SENSE
LT BLU/ YEL
BLK/ WHT
LT BLU/ YEL
4 C2
INTERIOR LIGHTS
S202 (I/P HARN, LOWER LEFT OF I/P)
ORG
DK BLU/ WHT
LT BLU/ YEL
LT BLU/ YEL
4
2
3
5
6
REAR WINDOW DEOGGER SWITCH
ILLUM
ON IND
LEFT POWER MIRROR
RIGHT POWER MIRROR
REAR WINDOW DEOGGER
6
6
BLK
BLK
BLK
1
BLK
S208
S329
S319
(NEAR GLOVE BOX LAMP SWITCH)
(NEAR LEFT TAIL LAMP)
(NEAR GLOVE BOX LAMP SWITCH)
(NEAR REAR WINDOW DEFOGGER)
BLK
BLK
BLK
BLK
G203
G404
G203
G411
88272