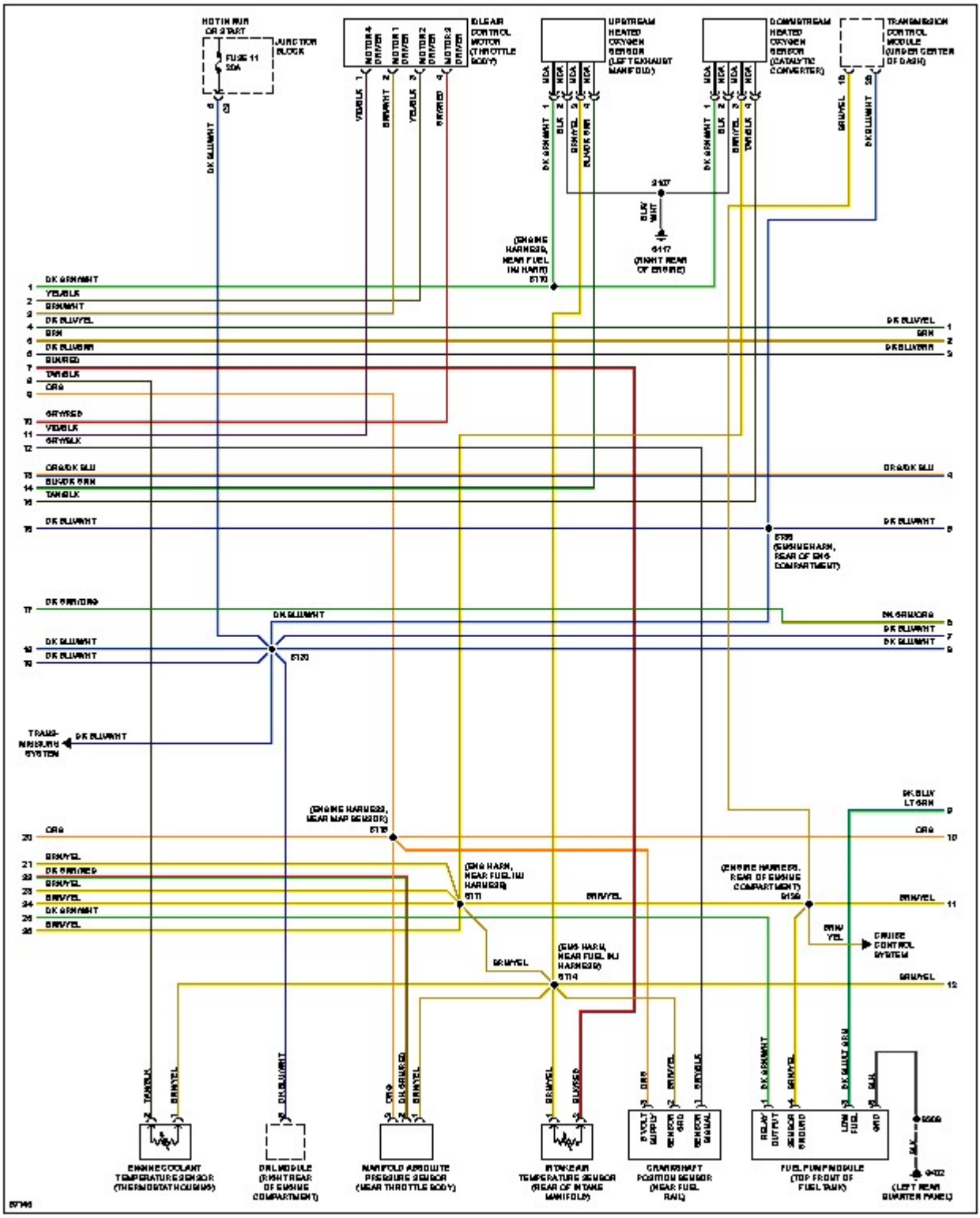
HOT IN RUN OR START
FUSE 11 30A
JUNCTION BLOCK
IDLE AIR CONTROL MOTOR (THROTTLE BODY)
MOTOR 4 DRIVER
MOTOR 1 DRIVER
MOTOR 2 DRIVER
MOTOR 3 DRIVER
UPSTREAM HEATED OXYGEN SENSOR (LEFT EXHAUST MANIFOLD)
DOWNSTREAM HEATED OXYGEN SENSOR (CATALYTIC CONVERTER)
TRANSMISSION CONTROL MODULE (UNDER CENTER OF DASH)
S107
BLK/WHT
G117 (RIGHT REAR OF ENGINE)
(ENGINE HARNESS, NEAR FUEL INJ HARN) S110
DK GRN/WHT
YEL/BLK
BRN/WHT
DK BLU/YEL
BRN
DK BLU/BRN
BLK/RED
TAN/BLK
ORG
GRY/RED
YEL/BLK
GRY/BLK
ORG/DK BLU
BLK/DK BRN
TAN/BLK
DK BLU/WHT
S108 (ENGINE HARN, REAR OF ENG COMPARTMENT)
DK GRN/ORG
DK BLU/WHT
S120
TRANS-MISSION SYSTEM
DK BLU/WHT
(ENGINE HARNESS, NEAR MAP SENSOR) S119
ORG
BRN/YEL
DK GRN/RED
BRN/YEL
BRN/YEL
DK GRN/WHT
BRN/YEL
(ENG HARN, NEAR FUEL INJ HARNESS) S111
BRN/YEL
(ENGINE HARNESS, REAR OF ENGINE COMPARTMENT) S109
BRN/YEL
BRN YEL
CRUISE CONTROL SYSTEM
(ENG HARN, NEAR FUEL INJ HARNESS) S114
BRN/YEL
DK BLU LT GRN
ORG
TAN/BLK
BRN/YEL
DK BLU/WHT
ORG
DK GRN/RED
BRN/YEL
BRN/YEL
BLK/RED
ORG
BRN/YEL
YEL/BLK
DK GRN/WHT
BRN/YEL
DK BLU LT GRN
BLK
ENGINE COOLANT TEMPERATURE SENSOR (THERMOSTAT HOUSING)
DRL MODULE (RIGHT REAR OF ENGINE COMPARTMENT)
MANIFOLD ABSOLUTE PRESSURE SENSOR (NEAR THROTTLE BODY)
INTAKE AIR TEMPERATURE SENSOR (REAR OF INTAKE MANIFOLD)
CRANKSHAFT POSITION SENSOR (NEAR FUEL RAIL)
5 VOLT SUPPLY
SENSOR GRD
SENSOR SIGNAL
FUEL PUMP MODULE (TOP FRONT OF FUEL TANK)
RELAY OUTPUT
SENSOR GROUND
LOW FUEL
GRD
S209
BLK
G402 (LEFT REAR QUARTER PANEL)