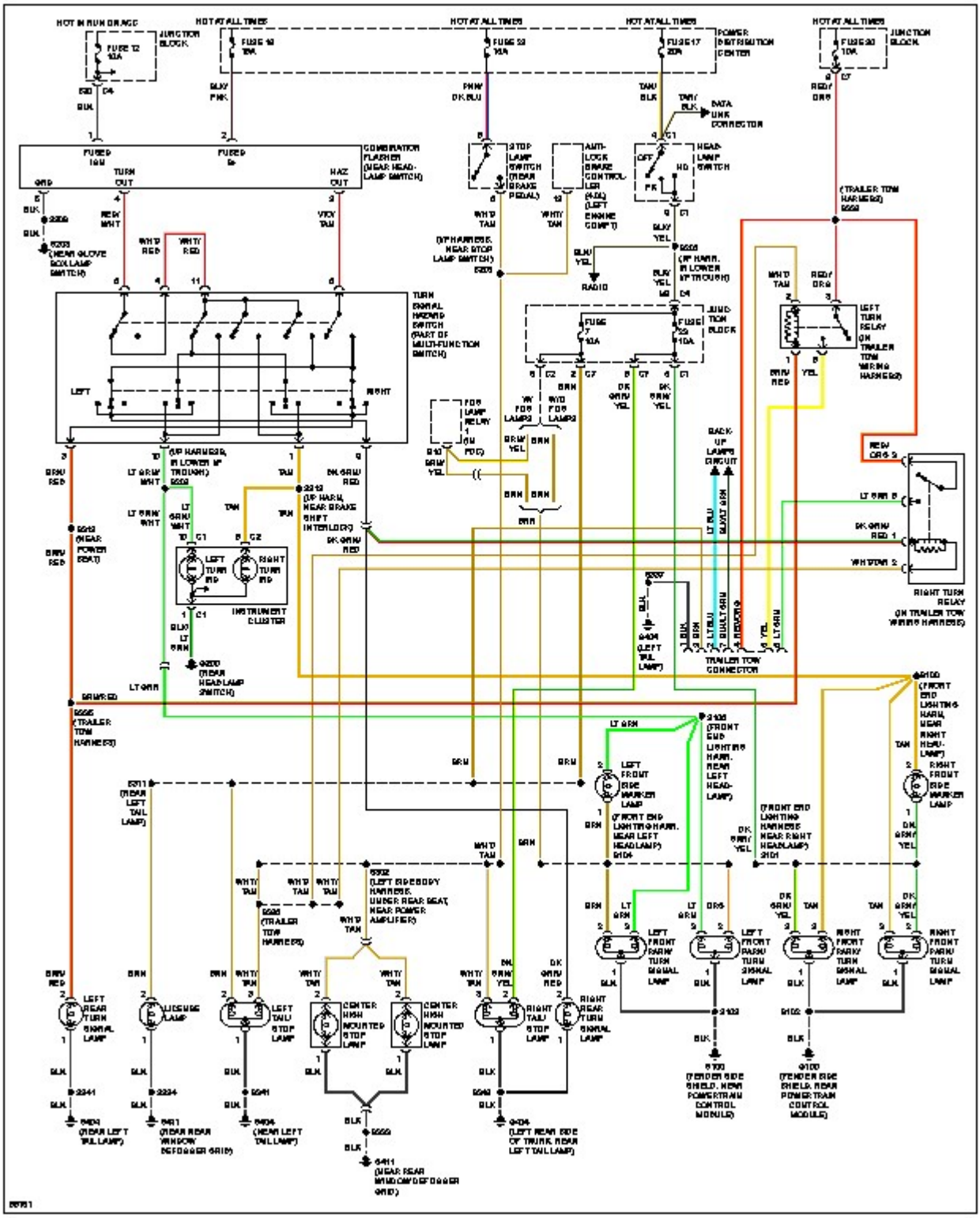
HOT IN RUN OR ACC
HOT AT ALL TIMES
JUNCTION BLOCK
POWER DISTRIBUTION CENTER
DATA LINK CONNECTOR
COMBINATION FLASHER (NEAR HEAD-LAMP SWITCH)
STOP LAMP SWITCH (NEAR BRAKE PEDAL)
ANTI-LOCK BRAKE CONTROL-LER (4.0L) (LEFT ENGINE COMPT)
HEAD-LAMP SWITCH
(TRAILER TOW HARNESS)
(NEAR GLOVE BOX LAMP SWITCH)
TURN SIGNAL HAZARD SWITCH (PART OF MULTI-FUNCTION SWITCH)
RADIO
LEFT TURN RELAY (IN TRAILER TOW WIRING HARNESS)
FOG LAMP RELAY
BACK-UP LAMPS CIRCUIT
RIGHT TURN RELAY (IN TRAILER TOW WIRING HARNESS)
INSTRUMENT CLUSTER
TRAILER TOW CONNECTOR
(NEAR POWER SEAT)
(NEAR HEAD LAMP SWITCH)
(TRAILER TOW HARNESS)
(FRONT END LIGHTING HARN, NEAR RIGHT HEAD-LAMP)
(FRONT END LIGHTING HARN, NEAR LEFT HEAD-LAMP)
(FRONT END LIGHTING HARNESS NEAR RIGHT HEADLAMP)
(REAR LEFT TAIL LAMP)
(LEFT SIDE BODY HARNESS, UNDER REAR SEAT, NEAR POWER AMPLIFIER)
(TRAILER TOW HARNESS)
LEFT FRONT SIDE MARKER LAMP
RIGHT FRONT SIDE MARKER LAMP
LEFT FRONT PARK/ TURN SIGNAL LAMP
RIGHT FRONT PARK/ TURN SIGNAL LAMP
LEFT REAR TURN SIGNAL LAMP
LICENSE LAMP
LEFT TAIL/ STOP LAMP
CENTER HIGH MOUNTED STOP LAMP
RIGHT TAIL/ STOP LAMP
RIGHT REAR TURN SIGNAL LAMP
(FENDER SIDE SHIELD, NEAR POWERTRAIN CONTROL MODULE)
(FENDER SIDE SHIELD, NEAR POWERTRAIN CONTROL MODULE)
(REAR LEFT TAIL LAMP)
(NEAR REAR WINDOW DEFOGGER GRID)
(LEFT REAR SIDE OF TRUNK, NEAR LEFT TAIL LAMP)
(NEAR REAR WINDOW DEFOGGER GRID)