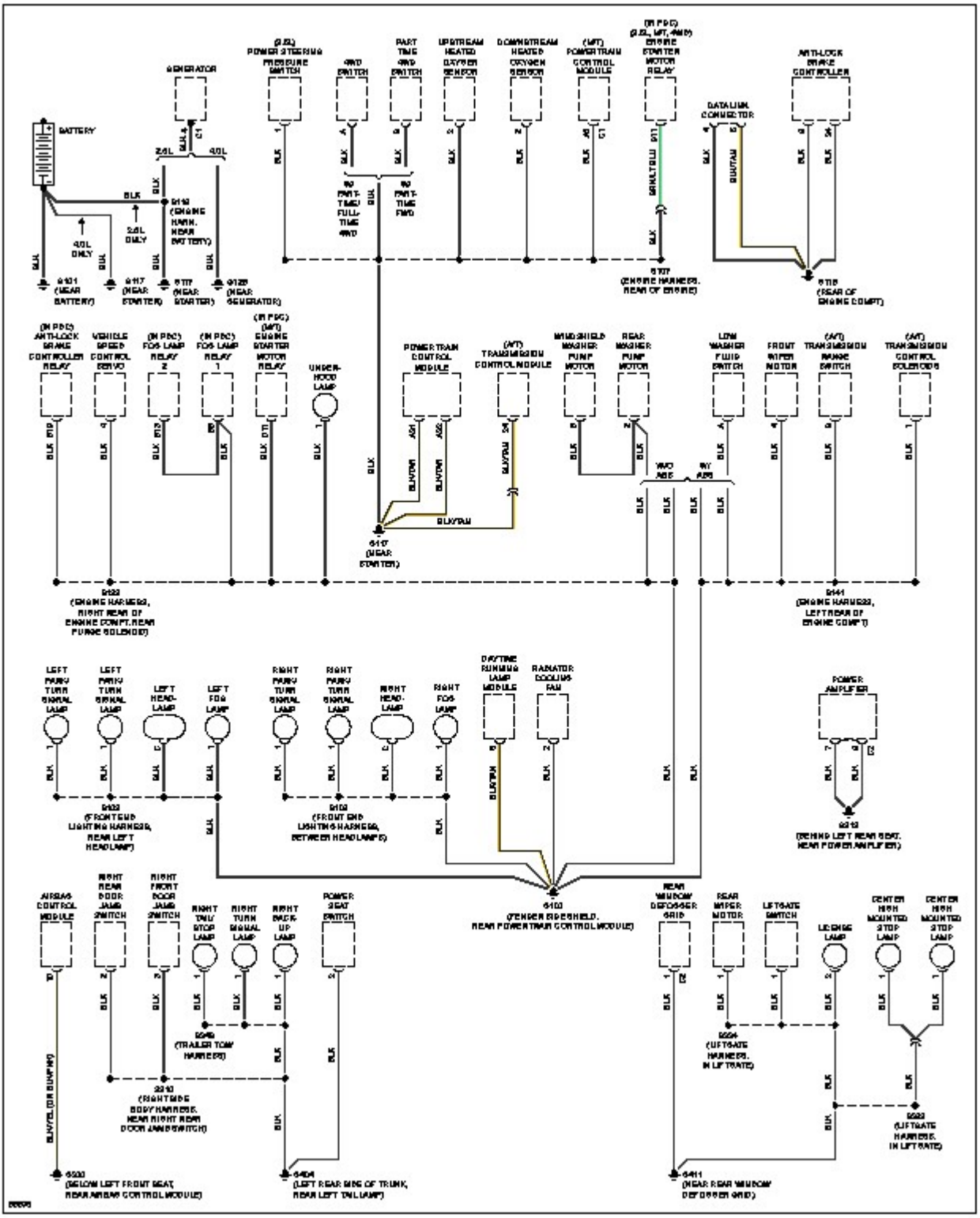
GENERATOR
BATTERY
(2.5L) POWER STEERING PRESSURE SWITCH
4WD SWITCH
PART TIME 4WD SWITCH
UPSTREAM HEATED OXYGEN SENSOR
DOWNSTREAM HEATED OXYGEN SENSOR
(MT) POWER TRAIN CONTROL MODULE
(IN PDC) (2.5L, MT, 4WD) ENGINE STARTER MOTOR RELAY
ANTI-LOCK BRAKE CONTROLLER
DATA LINK CONNECTOR
2.5L
4.0L
4.0L ONLY
2.5L ONLY
W/ PART-TIME/ FULL-TIME 4WD
W/ PART-TIME 4WD
(ENGINE HARN. NEAR BATTERY)
(NEAR BATTERY)
(NEAR STARTER)
(NEAR STARTER)
(NEAR GENERATOR)
(ENGINE HARNESS, REAR OF ENGINE)
(REAR OF ENGINE COMPT)
(IN PDC) ANTI-LOCK BRAKE CONTROLLER RELAY
VEHICLE SPEED CONTROL SERVO
(IN PDC) FOG LAMP RELAY 2
(IN PDC) FOG LAMP RELAY 1
(MT) ENGINE STARTER MOTOR RELAY
UNDER-HOOD LAMP
POWER TRAIN CONTROL MODULE
(AT) TRANSMISSION CONTROL MODULE
WINDSHIELD WASHER PUMP MOTOR
REAR WASHER PUMP MOTOR
LOW WASHER FLUID SWITCH
FRONT WIPER MOTOR
(AT) TRANSMISSION RANGE SWITCH
(AT) TRANSMISSION CONTROL SOLENOIDS
W/O ABS
W/ ABS
(ENGINE HARNESS, RIGHT REAR OF ENGINE COMPT. REAR PURGE SOLENOID)
(ENGINE HARNESS, LEFT REAR OF ENGINE COMPT)
LEFT PARK/ TURN SIGNAL LAMP
LEFT PARK/ TURN SIGNAL LAMP
LEFT HEAD-LAMP
LEFT FOG LAMP
RIGHT PARK/ TURN SIGNAL LAMP
RIGHT PARK/ TURN SIGNAL LAMP
RIGHT HEAD-LAMP
RIGHT FOG LAMP
DAYTIME RUNNING LAMP MODULE
RADIATOR COOLING FAN
POWER AMPLIFIER
(FRONT END LIGHTING HARNESS, REAR LEFT HEADLAMP)
(FRONT END LIGHTING HARNESS, BETWEEN HEADLAMPS)
(BEHIND LEFT REAR SEAT, NEAR POWER AMPLIFIER)
(FENDER SIDESHIELD, NEAR POWER TRAIN CONTROL MODULE)
AIRBAG CONTROL MODULE
RIGHT REAR DOOR JAMB SWITCH
RIGHT FRONT DOOR JAMB SWITCH
RIGHT TAIL/ STOP LAMP
RIGHT TURN SIGNAL LAMP
RIGHT BACK-UP LAMP
POWER SEAT SWITCH
REAR WINDOW DEFOGGER GRID
REAR WIPER MOTOR
LIFTGATE SWITCH
LICENSE LAMP
CENTER HIGH MOUNTED STOP LAMP
CENTER HIGH MOUNTED STOP LAMP
(TRAILER TOW HARNESS)
(LIFTGATE HARNESS, IN LIFTGATE)
(RIGHT SIDE BODY HARNESS, NEAR RIGHT REAR DOOR JAMB SWITCH)
(LIFTGATE HARNESS, IN LIFTGATE)
(BELOW LEFT FRONT SEAT, REAR AIRBAG CONTROL MODULE)
(LEFT REAR SIDE OF TRUNK, REAR LEFT TAIL LAMP)
(NEAR REAR WINDOW DEFOGGER GRID)