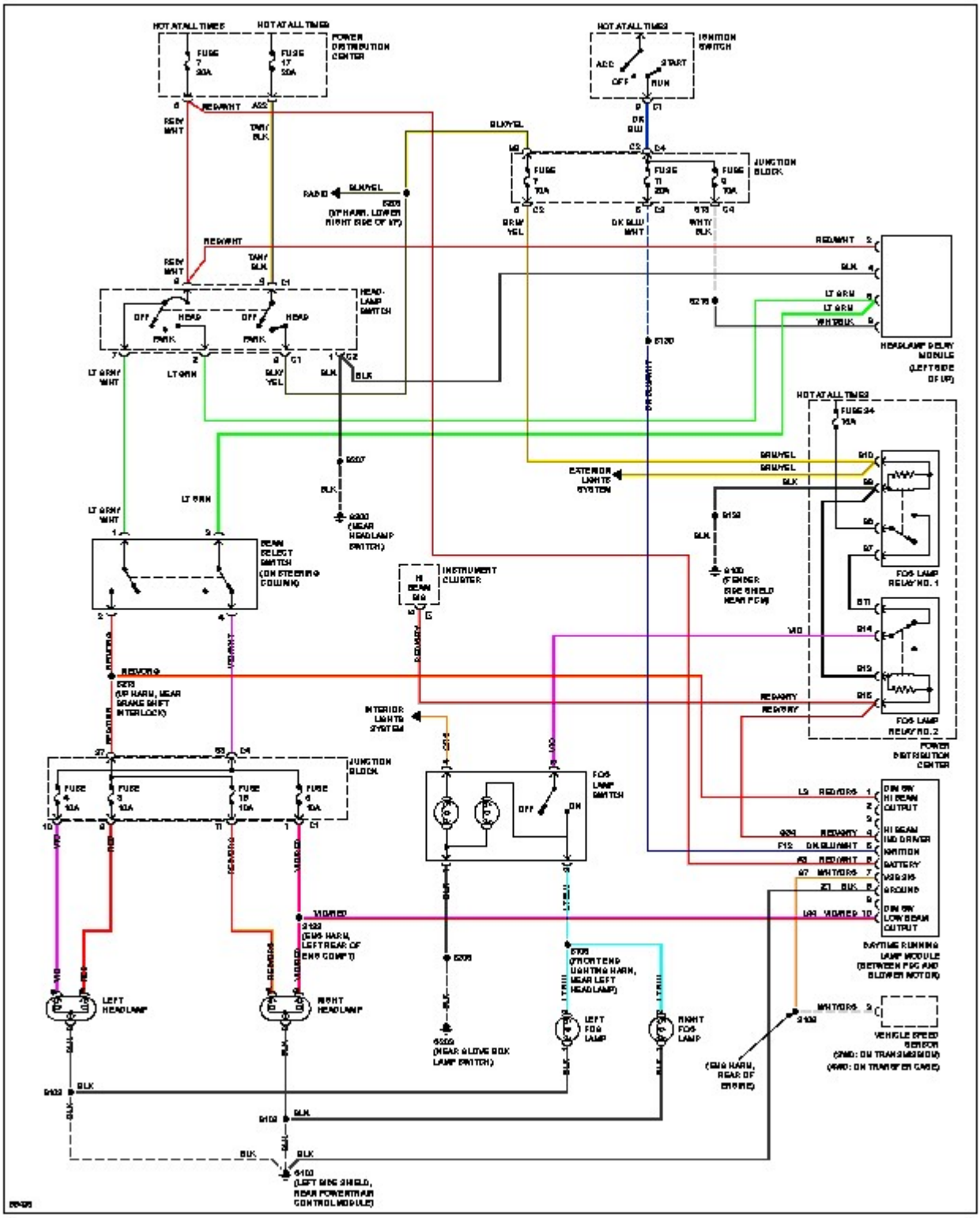

HOT AT ALL TIMES
POWER DISTRIBUTION CENTER
IGNITION SWITCH
JUNCTION BLOCK
HEAD-LAMP SWITCH
HEADLAMP DELAY MODULE (LEFT SIDE OF UP)
EXTERIOR LIGHTS SYSTEM
BEAM SELECT SWITCH (ON STEERING COLUMN)
INSTRUMENT CLUSTER
FOG LAMP RELAY NO. 1
FOG LAMP RELAY NO. 2
INTERIOR LIGHTS SYSTEM
FOG LAMP SWITCH
DAYTIME RUNNING LAMP MODULE (BETWEEN FOG AND BLOWER MOTOR)
VEHICLE SPEED SENSOR
LEFT HEADLAMP
RIGHT HEADLAMP
LEFT FOG LAMP
RIGHT FOG LAMP