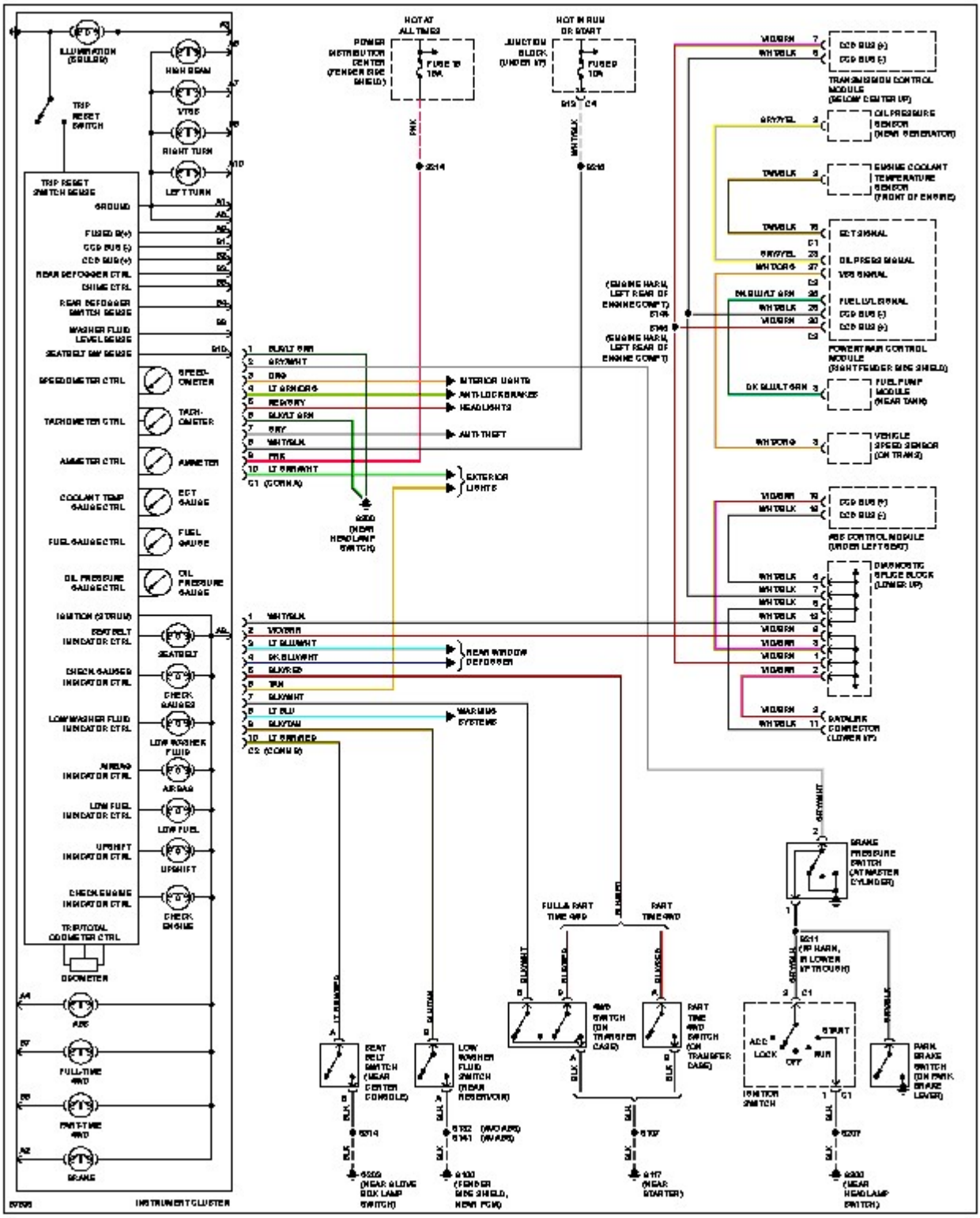

ILLUMINATION (SBULBS)
HIGH BEAM
VTSS
RIGHT TURN
LEFT TURN
TRIP RESET SWITCH
TRIP RESET SWITCH SENSE
GROUND
FUSED B(+)
CCB BUS (-)
CCB BUS (+)
REAR DEFOGGER CTRL
CHIME CTRL
REAR DEFOGGER SWITCH SENSE
WASHER FLUID LEVEL SENSE
SEATBELT BW SENSE
SPEEDOMETER CTRL
SPEED-OMETER
TACHOMETER CTRL
TACH-OMETER
AMMETER CTRL
AMMETER
COOLANT TEMP GAUGE CTRL
ECT GAUGE
FUEL GAUGE CTRL
FUEL GAUGE
OIL PRESSURE GAUGE CTRL
OIL PRESSURE GAUGE
IGNITION (STRUM)
SEATBELT INDICATOR CTRL
SEATBELT
CHECK GAUGES INDICATOR CTRL
CHECK GAUGES
LOW WASHER FLUID INDICATOR CTRL
LOW WASHER FLUID
AIRBAG INDICATOR CTRL
AIRBAG
LOW FUEL INDICATOR CTRL
LOW FUEL
UPSHIFT INDICATOR CTRL
UPSHIFT
CHECK ENGINE INDICATOR CTRL
CHECK ENGINE
TRIP/TOTAL ODOMETER CTRL
ODOMETER
ABS
FULL-TIME 4WD
PART-TIME 4WD
BRAKE
INSTRUMENT CLUSTER
HOT AT ALL TIMES
POWER DISTRIBUTION CENTER (FENDER SIDE SHIELD)
FUSE 15 10A
HOT IN RUN OR START
JUNCTION BLOCK (UNDER I/P)
FUSED 10A
INTERIOR LIGHTS
ANTI-LOCK BRAKES
HEADLIGHTS
ANTI-THEFT
EXTERIOR LIGHTS
REAR WINDOW DEFOGGER
WARNING SYSTEMS
C1 (CONN A)
C2 (CONN B)
TRANSMISSION CONTROL MODULE (BELOW CENTER I/P)
OIL PRESSURE SENSOR (NEAR GENERATOR)
ENGINE COOLANT TEMPERATURE SENSOR (FRONT OF ENGINE)
ECT SIGNAL
OIL PRESS SIGNAL
VSS SIGNAL
FUEL LVL SIGNAL
POWERTRAIN CONTROL MODULE (RIGHT FENDER SIDE SHIELD)
FUEL PUMP MODULE (NEAR TANK)
VEHICLE SPEED SENSOR (ON TRANS)
ABS CONTROL MODULE (UNDER LEFT SEAT)
DIAGNOSTIC SPLICE BLOCK (LOWER I/P)
DATALINK CONNECTOR (LOWER I/P)
BRAKE PRESSURE SWITCH (AT MASTER CYLINDER)
FULL & PART TIME 4WD
PART TIME 4WD
4WD SWITCH (ON TRANSFER CASE)
PART TIME 4WD SWITCH (ON TRANSFER CASE)
SEAT BELT SWITCH (NEAR CENTER CONSOLE)
LOW WASHER FLUID SWITCH (NEAR RESERVOIR)
IGNITION SWITCH
ACC
LOCK
OFF
START
RUN
PARK BRAKE SWITCH (ON PARK BRAKE LEVER)
(NEAR GLOVE BOX LAMP SWITCH)
(FENDER SIDE SHIELD, NEAR PCM)
(NEAR STARTER)
(NEAR HEADLAMP SWITCH)