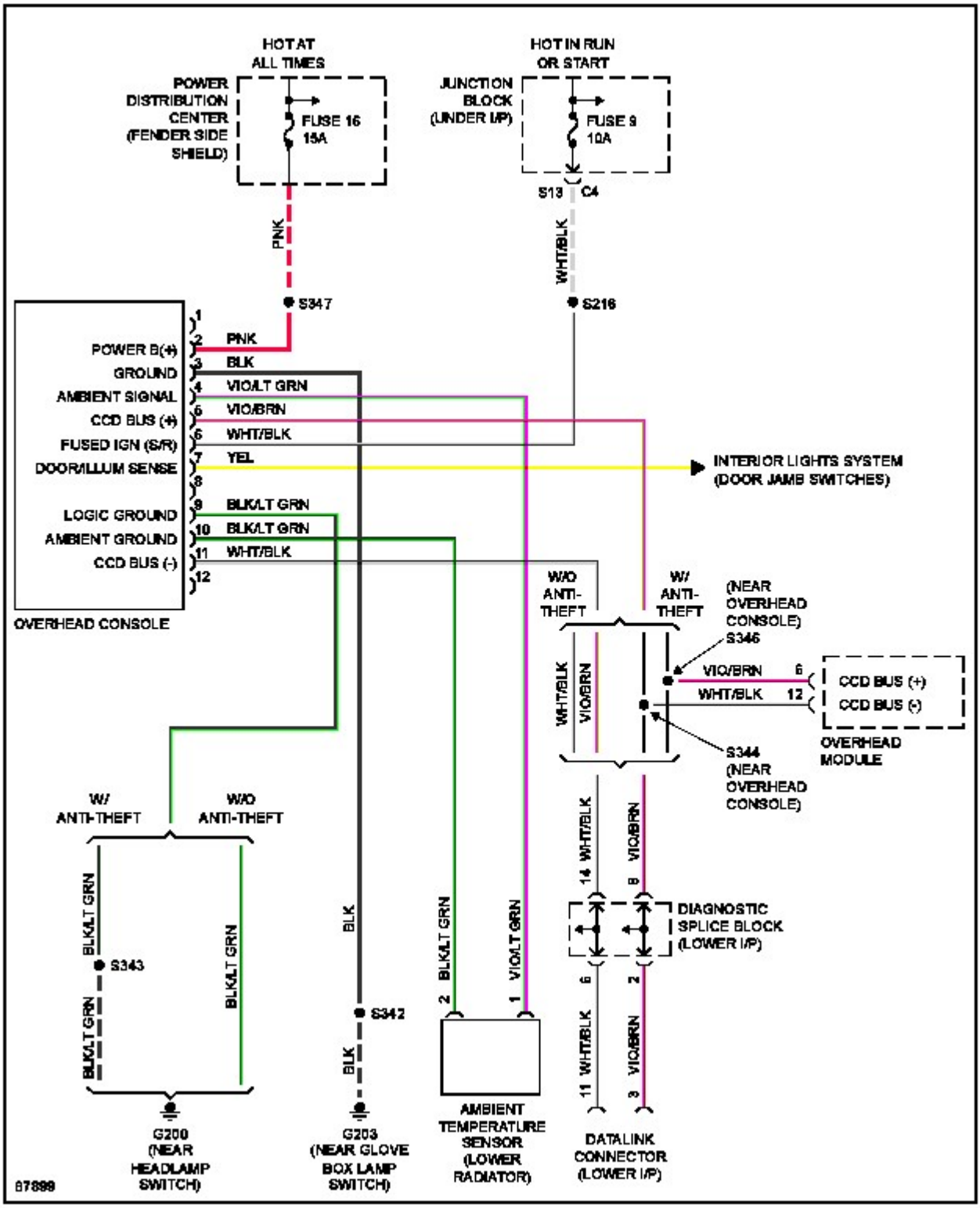
HOT AT ALL TIMES
POWER DISTRIBUTION CENTER (FENDER SIDE SHIELD)
FUSE 16 15A
HOT IN RUN OR START
JUNCTION BLOCK (UNDER I/P)
FUSE 9 10A
S13
C4
PNK
WHT/BLK
S347
S216
POWER B(+)
GROUND
AMBIENT SIGNAL
CCD BUS (+)
FUSED IGN (S/R)
DOOR/ILLUM SENSE
LOGIC GROUND
AMBIENT GROUND
CCD BUS (-)
PNK
BLK
VIO/LT GRN
VIO/BRN
WHT/BLK
YEL
BLK/LT GRN
BLK/LT GRN
WHT/BLK
OVERHEAD CONSOLE
INTERIOR LIGHTS SYSTEM (DOOR JAMB SWITCHES)
W/O ANTI-THEFT
W/ ANTI-THEFT
(NEAR OVERHEAD CONSOLE)
S346
VIO/BRN
WHT/BLK
CCD BUS (+)
CCD BUS (-)
OVERHEAD MODULE
S344 (NEAR OVERHEAD CONSOLE)
W/ ANTI-THEFT
W/O ANTI-THEFT
BLK/LT GRN
S343
BLK/LT GRN
BLK/LT GRN
BLK
S342
BLK
BLK/LT GRN
VIO/LT GRN
WHT/BLK
VIO/BRN
DIAGNOSTIC SPLICE BLOCK (LOWER I/P)
WHT/BLK
VIO/BRN
G200 (NEAR HEADLAMP SWITCH)
G203 (NEAR GLOVE BOX LAMP SWITCH)
AMBIENT TEMPERATURE SENSOR (LOWER RADIATOR)
DATALINK CONNECTOR (LOWER I/P)
87899