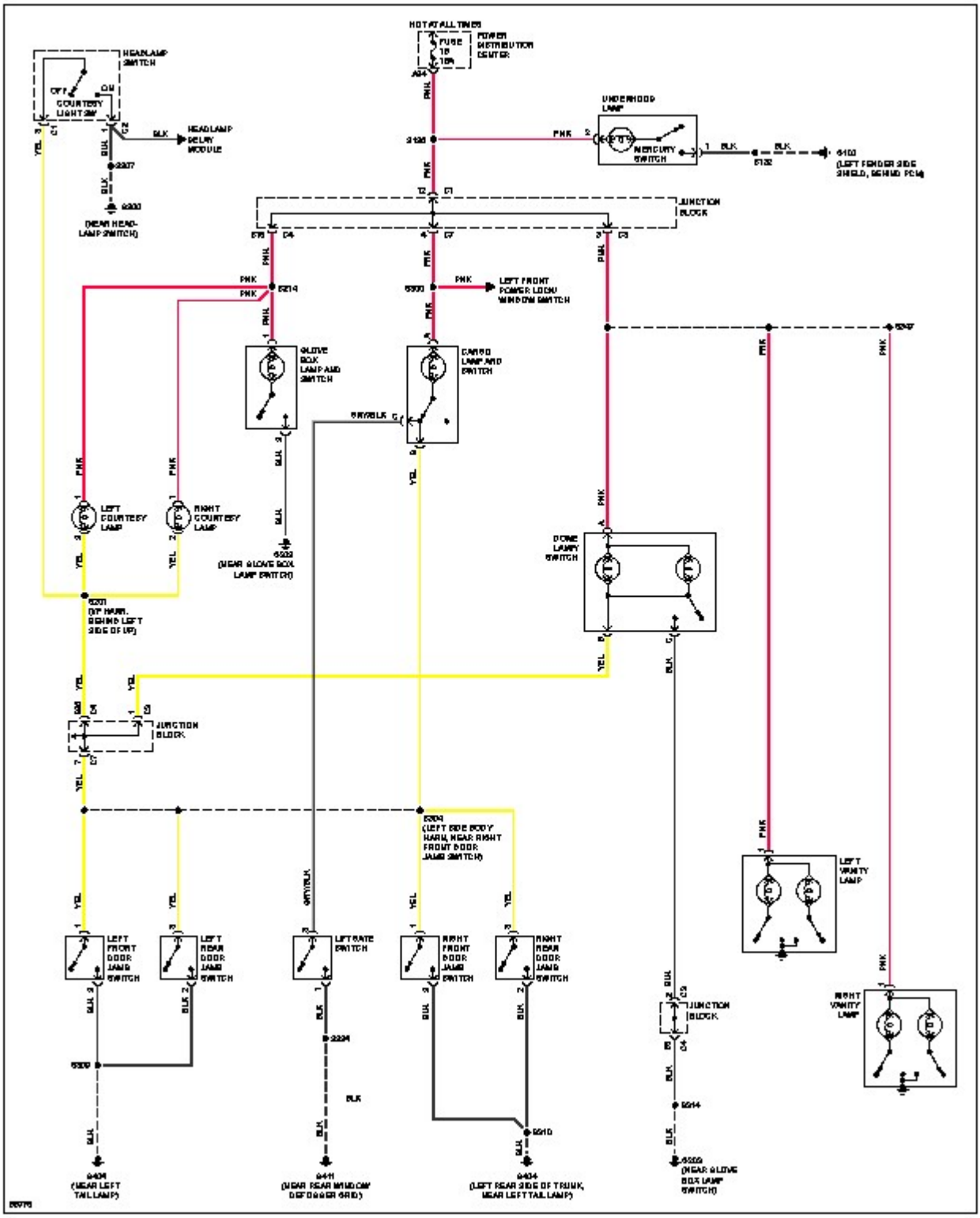
HOT AT ALL TIMES
FUSE 15 10A
POWER DISTRIBUTION CENTER
HEADLAMP SWITCH
OFF
COURTESY LIGHT SW
ON
HEAD LAMP DELAY MODULE
(NEAR HEAD-LAMP SWITCH)
UNDERHOOD LAMP
MERCURY SWITCH
(LEFT FENDER SIDE SHIELD, BEHIND PCM)
JUNCTION BLOCK
LEFT FRONT POWER LOCK/ WINDOW SWITCH
GLOVE BOX LAMP AND SWITCH
CARGO LAMP AND SWITCH
LEFT COURTESY LAMP
RIGHT COURTESY LAMP
(NEAR GLOVE BOX LAMP SWITCH)
DOME LAMPS SWITCH
(LEFT SIDE BODY HARN, NEAR RIGHT FRONT DOOR JAMB SWITCH)
LEFT VANITY LAMP
RIGHT VANITY LAMP
LEFT FRONT DOOR JAMB SWITCH
LEFT REAR DOOR JAMB SWITCH
LEFT GATE SWITCH
RIGHT FRONT DOOR JAMB SWITCH
RIGHT REAR DOOR JAMB SWITCH
(NEAR LEFT TAIL LAMP)
(NEAR REAR WINDOW DEFOGGER GRID)
(LEFT REAR SIDE OF TRUNK, NEAR LEFT TAIL LAMP)
(NEAR GLOVE BOX LAMP SWITCH)