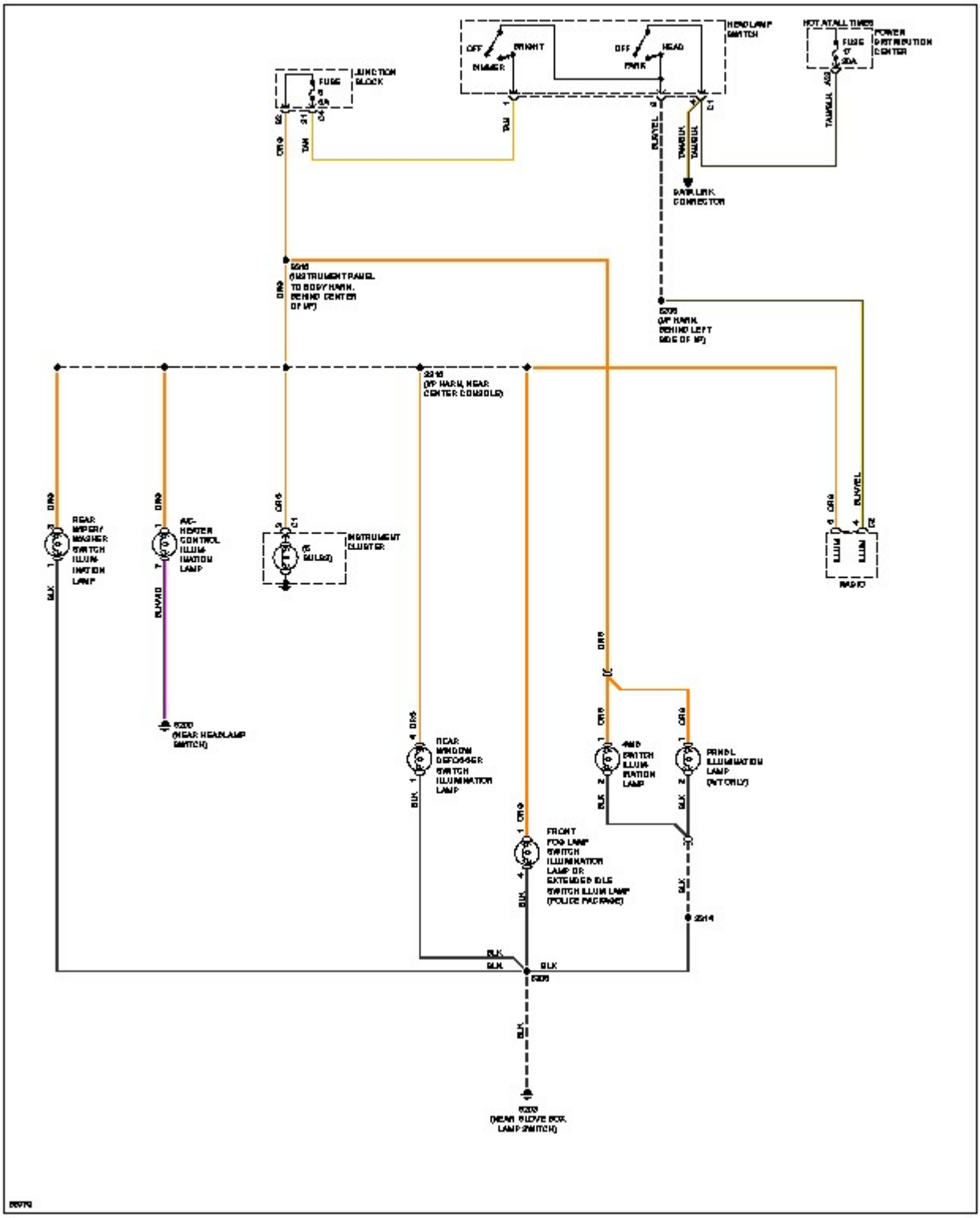

HEADLAMP SWITCH
OFF
BRIGHT
DIMMER
OFF
HEAD
PARK
HOT AT ALL TIMES
FUSE
POWER DISTRIBUTION CENTER
JUNCTION BLOCK
FUSE
TAN
BLK/YEL
TAN/BLK
TAN/BLK
TAN/BLK
DATA LINK CONNECTOR
(INSTRUMENT PANEL TO BODY HARN. BEHIND CENTER OF I/P)
(I/P HARN. BEHIND LEFT SIDE OF I/P)
(I/P HARN. NEAR CENTER CONSOLE)
REAR WIPER/ WASHER SWITCH ILLUMINATION LAMP
A/C-HEATER CONTROL ILLUMINATION LAMP
INSTRUMENT CLUSTER
(BULBS)
ILLUM
ILLUM
RADIO
BLK/YEL
(NEAR HEADLAMP SWITCH)
REAR WINDOW DEFOGGER SWITCH ILLUMINATION LAMP
4WD SWITCH ILLUMINATION LAMP
PANEL ILLUMINATION LAMP (AT ONLY)
FRONT FOG LAMP SWITCH ILLUMINATION LAMP OR EXTENDED IDLE SWITCH ILLUM LAMP (POLICE PACKAGE)
BLK
BLK
BLK
BLK
(NEAR GLOVE BOX LAMP SWITCH)