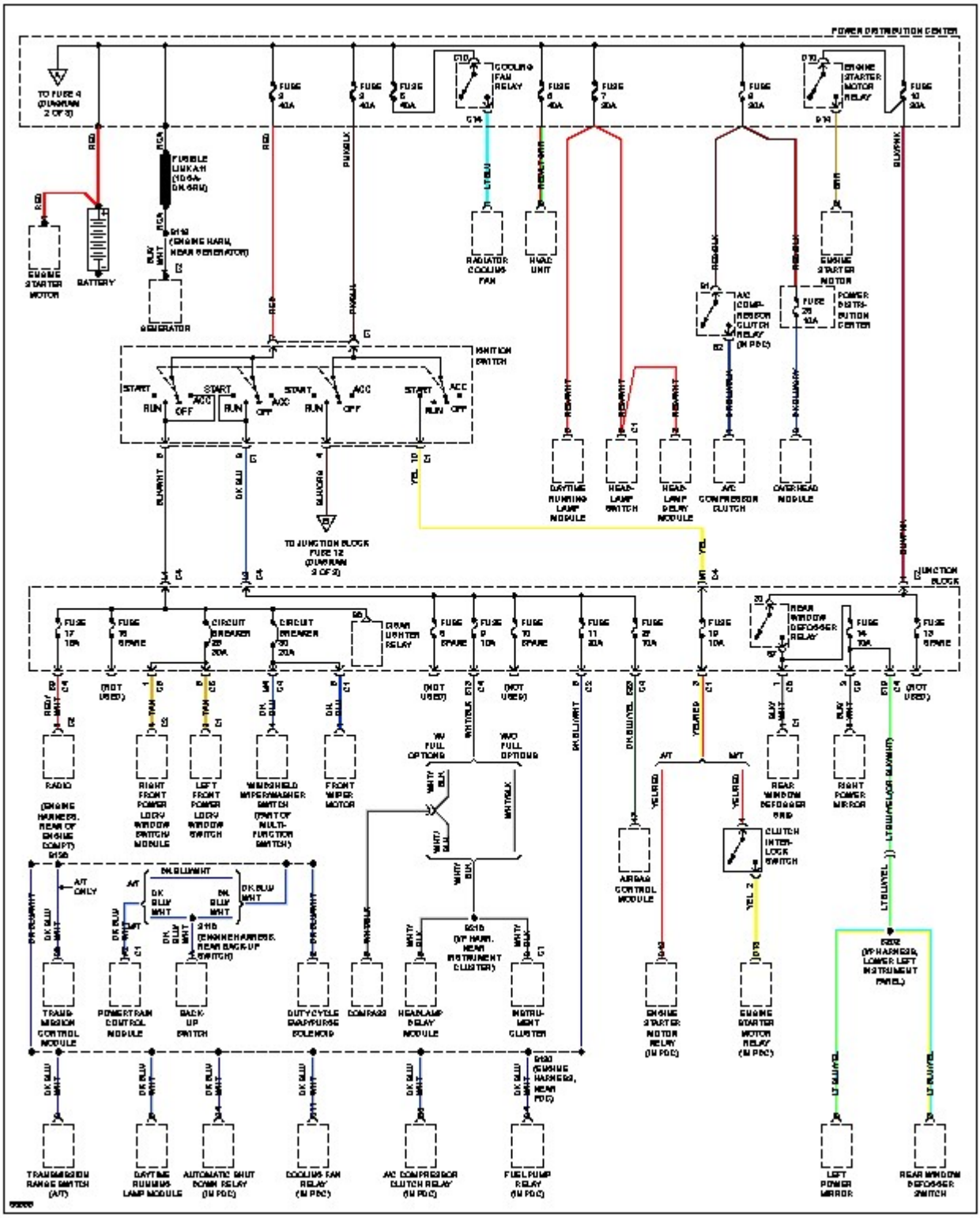
POWER DISTRIBUTION CENTER
TO FUSE 4 (DIAGRAM 2 OF 3)
FUSE 3 40A
FUSE 5 40A
COOLING FAN RELAY
FUSE 6 40A
FUSE 7 30A
FUSE 8 30A
ENGINE STARTER MOTOR RELAY
FUSE 10 30A
FUSIBLE LINK A-11 (10 GA-DK GRN)
ENGINE STARTER MOTOR
BATTERY
GENERATOR
RADIATOR COOLING FAN
HVAC UNIT
ENGINE STARTER MOTOR
A/C COMPRESSOR CLUTCH RELAY (IN PDC)
FUSE 26 10A
POWER DISTRIBUTION CENTER
IGNITION SWITCH
START
RUN
ACC
OFF
DAYTIME RUNNING LAMP MODULE
HEAD-LAMP SWITCH
HEAD-LAMP DELAY MODULE
A/C COMPRESSOR CLUTCH
OVERHEAD MODULE
TO JUNCTION BLOCK FUSE 12 (DIAGRAM 2 OF 3)
JUNCTION BLOCK
FUSE 17 10A
FUSE 18 SPARE
CIRCUIT BREAKER 28 30A
CIRCUIT BREAKER 30 20A
CIGAR LIGHTER RELAY
FUSE 8 SPARE
FUSE 9 10A
FUSE 10 SPARE
FUSE 11 20A
FUSE 27 10A
FUSE 19 10A
REAR WINDOW DEFOGGER RELAY
FUSE 14 10A
FUSE 13 SPARE
(NOT USED)
RADIO
(ENGINE HARNESS, REAR OF ENGINE COMPT)
RIGHT FRONT POWER LOCK/WINDOW SWITCH/MODULE
LEFT FRONT POWER LOCK/WINDOW SWITCH
WINDSHIELD WIPER/WASHER SWITCH (PART OF MULTI-FUNCTION SWITCH)
FRONT WIPER MOTOR
W/ FULL OPTIONS
W/O FULL OPTIONS
AIRBAG CONTROL MODULE
REAR WINDOW DEFOGGER GRID
CLUTCH INTER-LOCK SWITCH
RIGHT POWER MIRROR
A/T ONLY
(ENGINE HARNESS, REAR BACK-UP SWITCH)
(I/P HARN. NEAR INSTRUMENT CLUSTER)
(I/P HARNESS, LOWER LEFT INSTRUMENT PANEL)
TRANSMISSION CONTROL MODULE
POWERTRAIN CONTROL MODULE
BACK-UP SWITCH
DUTY CYCLE EVAPYPURGE SOLENOID
COMPASS
HEADLAMP DELAY MODULE
INSTRUMENT CLUSTER
ENGINE STARTER MOTOR RELAY (IN PDC)
ENGINE STARTER MOTOR RELAY (IN PDC)
(ENGINE HARNESS, NEAR PDC)
TRANSMISSION RANGE SWITCH (A/T)
DAYTIME RUNNING LAMP MODULE
AUTOMATIC SHUT DOWN RELAY (IN PDC)
COOLING FAN RELAY (IN PDC)
A/C COMPRESSOR CLUTCH RELAY (IN PDC)
FUEL PUMP RELAY (IN PDC)
LEFT POWER MIRROR
REAR WINDOW DEFOGGER SWITCH