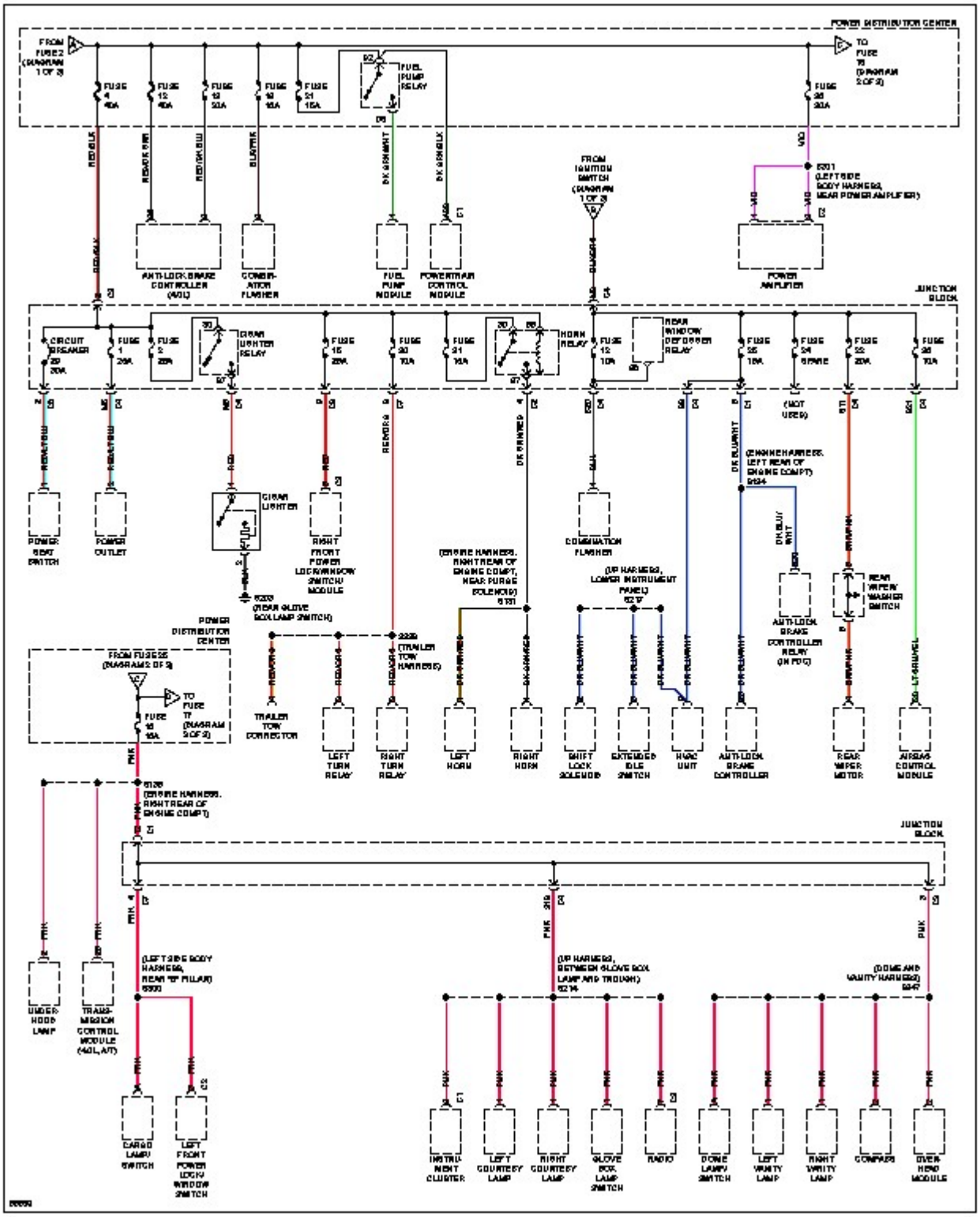
POWER DISTRIBUTION CENTER
FROM FUSE 2 (DIAGRAM 1 OF 3)
TO FUSE 16 (DIAGRAM 2 OF 3)
FUSE 4 40A
FUSE 12 40A
FUSE 13 20A
FUSE 18 15A
FUSE 21 15A
FUSE 26 20A
FUEL PUMP RELAY
FROM IGNITION SWITCH (DIAGRAM 1 OF 3)
(LEFT SIDE BODY HARNESS, NEAR POWER AMPLIFIER)
ANTI-LOCK BRAKE CONTROLLER (4.0L)
COMBIN-ATION FLASHER
FUEL PUMP MODULE
POWERTRAIN CONTROL MODULE
POWER AMPLIFIER
JUNCTION BLOCK
CIRCUIT BREAKER 29 20A
FUSE 1 20A
FUSE 2 20A
CIGAR LIGHTER RELAY
FUSE 15 20A
FUSE 20 10A
FUSE 21 15A
HORN RELAY
FUSE 12 10A
REAR WINDOW DEFOGGER RELAY
FUSE 25 15A
FUSE 24 SPARE
FUSE 22 20A
FUSE 26 10A
(NOT USED)
POWER SEAT SWITCH
POWER OUTLET
CIGAR LIGHTER
RIGHT FRONT POWER LOCK/WINDOW SWITCH/ MODULE
(REAR GLOVE BOX LAMP SWITCH)
COMBINATION FLASHER
(ENGINE HARNESS, LEFT REAR OF ENGINE COMPT)
(ENGINE HARNESS, RIGHT REAR OF ENGINE COMPT, NEAR PURGE SOLENOID)
(UP HARNESS, LOWER INSTRUMENT PANEL)
ANTI-LOCK BRAKE CONTROLLER RELAY (IN PDC)
REAR WIPER/ WASHER SWITCH
POWER DISTRIBUTION CENTER
FROM FUSE 25 (DIAGRAM 2 OF 3)
TO FUSE 17 (DIAGRAM 2 OF 3)
FUSE 16 15A
(TRAILER TOW HARNESS)
TRAILER TOW CORRECTOR
LEFT TURN RELAY
RIGHT TURN RELAY
LEFT HORN
RIGHT HORN
SHIFT LOCK SOLENOID
EXTENDED IDLE SWITCH
HVAC UNIT
ANTI-LOCK BRAKE CONTROLLER
REAR WIPER MOTOR
AIRBAG CONTROL MODULE
(ENGINE HARNESS, RIGHT REAR OF ENGINE COMPT)
JUNCTION BLOCK
(LEFT SIDE BODY HARNESS, REAR "B" PILLAR)
(UP HARNESS, BETWEEN GLOVE BOX LAMP AND TROUGH)
(DOME AND VANITY HARNESS)
UNDER-HOOD LAMP
TRANS-MISSION CONTROL MODULE (4.0L, A/T)
CARGO LAMP/ SWITCH
LEFT FRONT POWER LOCK/ WINDOW SWITCH
INSTRU-MENT CLUSTER
LEFT COURTESY LAMP
RIGHT COURTESY LAMP
GLOVE BOX LAMP SWITCH
RADIO
DOME LAMP/ SWITCH
LEFT VANITY LAMP
RIGHT VANITY LAMP
COMPASS
OVER-HEAD MODULE