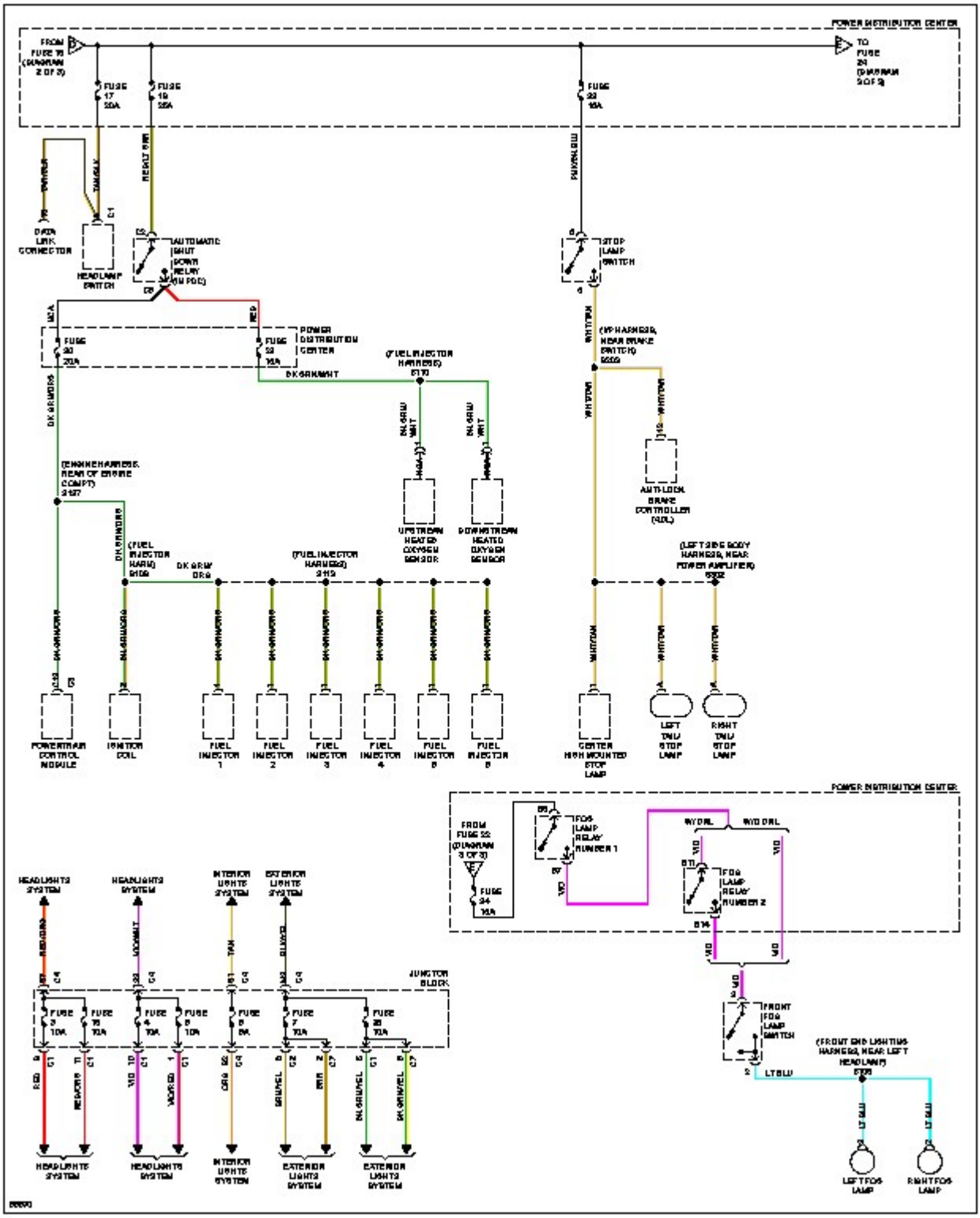
POWER DISTRIBUTION CENTER
FROM FUSE 16 (DIAGRAM 2 OF 3)
TO FUSE 24 (DIAGRAM 3 OF 3)
FUSE 17 20A
FUSE 19 25A
FUSE 22 15A
DATA LINK CONNECTOR
HEADLAMP SWITCH
AUTOMATIC SHUT DOWN RELAY (IN PDC)
STOP LAMP SWITCH
POWER DISTRIBUTION CENTER
(FUEL INJECTOR HARNESS)
UPSTREAM HEATED OXYGEN SENSOR
DOWNSTREAM HEATED OXYGEN SENSOR
ANTI-LOCK BRAKE CONTROLLER (ABL)
(ENGINE HARNESS, REAR OF ENGINE COMPT)
(FUEL INJECTOR HARN)
(FUEL INJECTOR HARNESS)
(LEFT SIDE BODY HARNESS, NEAR POWER AMPLIFIER)
POWERTRAIN CONTROL MODULE
IGNITION COIL
FUEL INJECTOR 1
FUEL INJECTOR 2
FUEL INJECTOR 3
FUEL INJECTOR 4
FUEL INJECTOR 5
FUEL INJECTOR 6
CENTER HIGH MOUNTED STOP LAMP
LEFT TAIL/ STOP LAMP
RIGHT TAIL/ STOP LAMP
POWER DISTRIBUTION CENTER
FROM FUSE 22 (DIAGRAM 3 OF 3)
FUSE 24 15A
FOG LAMP RELAY NUMBER 1
FOG LAMP RELAY NUMBER 2
FRONT FOG LAMP SWITCH
(FRONT END LIGHTING HARNESS, NEAR LEFT HEADLAMP)
LEFT FOG LAMP
RIGHT FOG LAMP
HEADLIGHTS SYSTEM
HEADLIGHTS SYSTEM
INTERIOR LIGHTS SYSTEM
EXTERIOR LIGHTS SYSTEM
JUNCTION BLOCK
HEADLIGHTS SYSTEM
HEADLIGHTS SYSTEM
INTERIOR LIGHTS SYSTEM
EXTERIOR LIGHTS SYSTEM
EXTERIOR LIGHTS SYSTEM