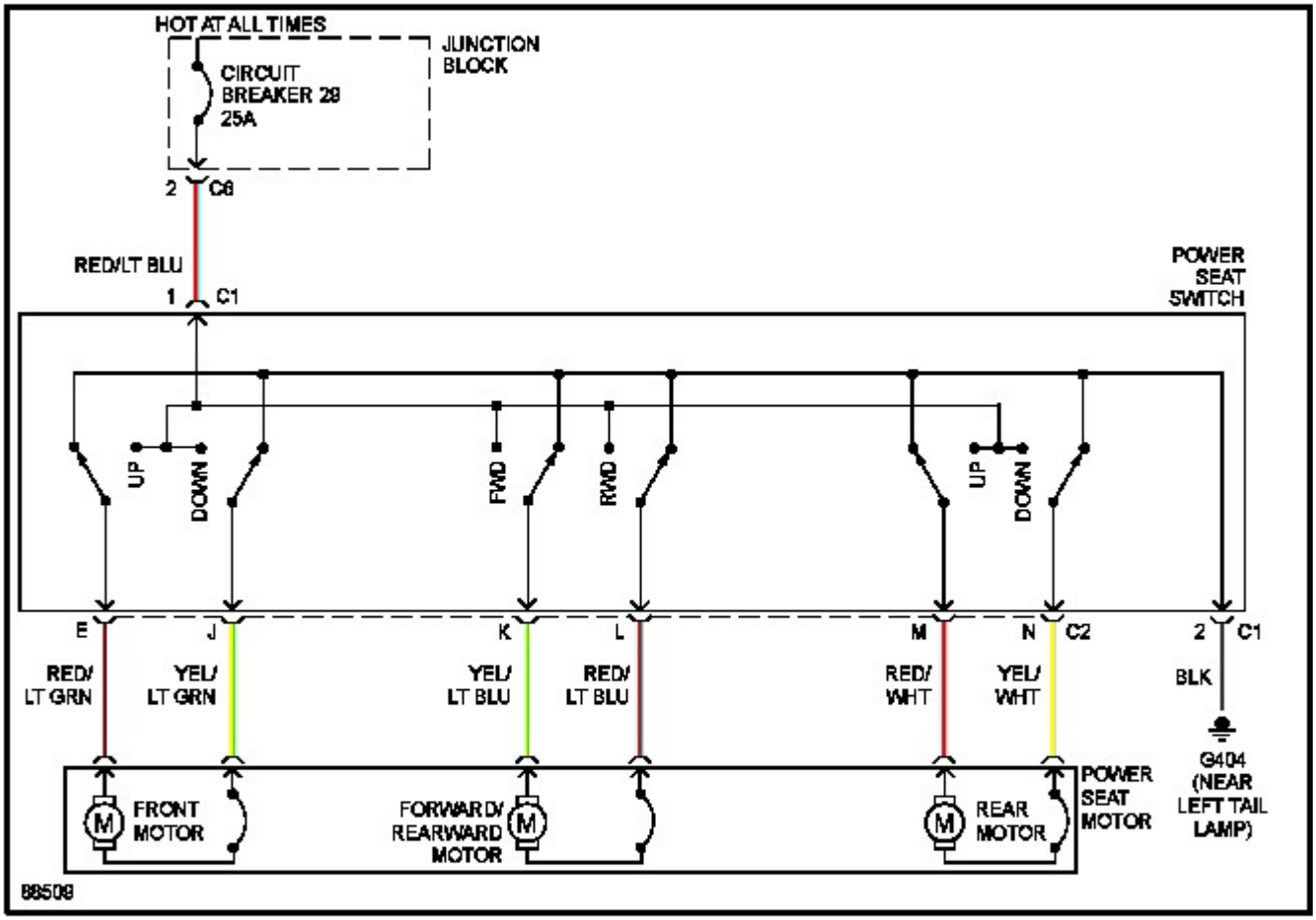
HOT AT ALL TIMES
JUNCTION BLOCK
CIRCUIT BREAKER 28 25A
2
C8
RED/LT BLU
1
C1
POWER SEAT SWITCH
UP
DOWN
FWD
RWD
UP
DOWN
E
J
K
L
M
N
C2
2
C1
RED/ LT GRN
YEL/ LT GRN
YEL/ LT BLU
RED/ LT BLU
RED/ WHT
YEL/ WHT
BLK
G404 (NEAR LEFT TAIL LAMP)
FRONT MOTOR
FORWARD/ REARWARD MOTOR
REAR MOTOR
POWER SEAT MOTOR
88509