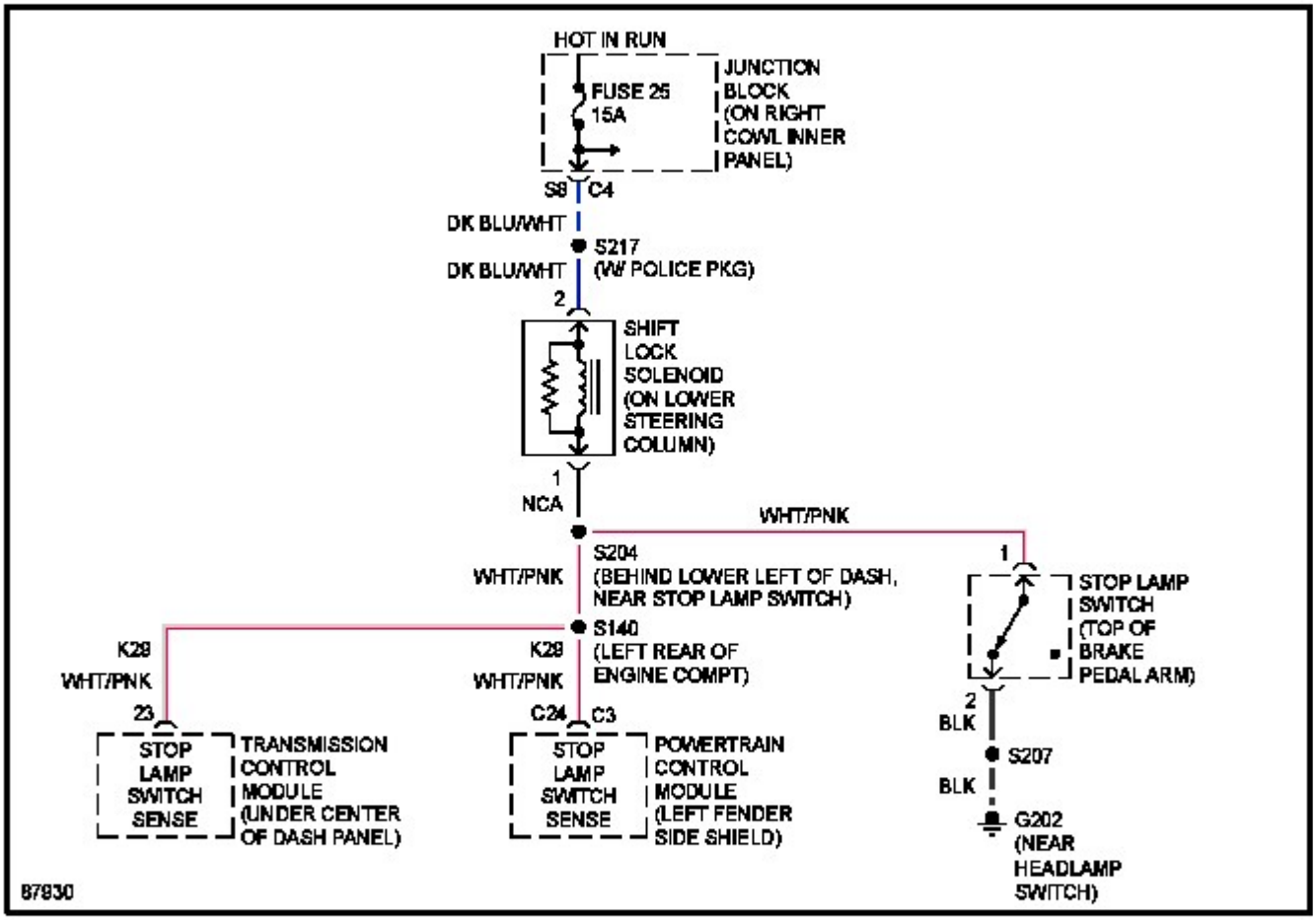
HOT IN RUN
FUSE 25
15A
JUNCTION BLOCK (ON RIGHT COWL INNER PANEL)
S8
C4
DK BLU/WHT
S217
(W/ POLICE PKG)
DK BLU/WHT
2
SHIFT LOCK SOLENOID (ON LOWER STEERING COLUMN)
1
NCA
WHT/PNK
S204
(BEHIND LOWER LEFT OF DASH, NEAR STOP LAMP SWITCH)
WHT/PNK
1
STOP LAMP SWITCH (TOP OF BRAKE PEDAL ARM)
S140
(LEFT REAR OF ENGINE COMPT)
K29
WHT/PNK
K29
WHT/PNK
23
STOP LAMP SWITCH SENSE
TRANSMISSION CONTROL MODULE (UNDER CENTER OF DASH PANEL)
C24
C3
STOP LAMP SWITCH SENSE
POWERTRAIN CONTROL MODULE (LEFT FENDER SIDE SHIELD)
2
BLK
S207
BLK
G202
(NEAR HEADLAMP SWITCH)
87930