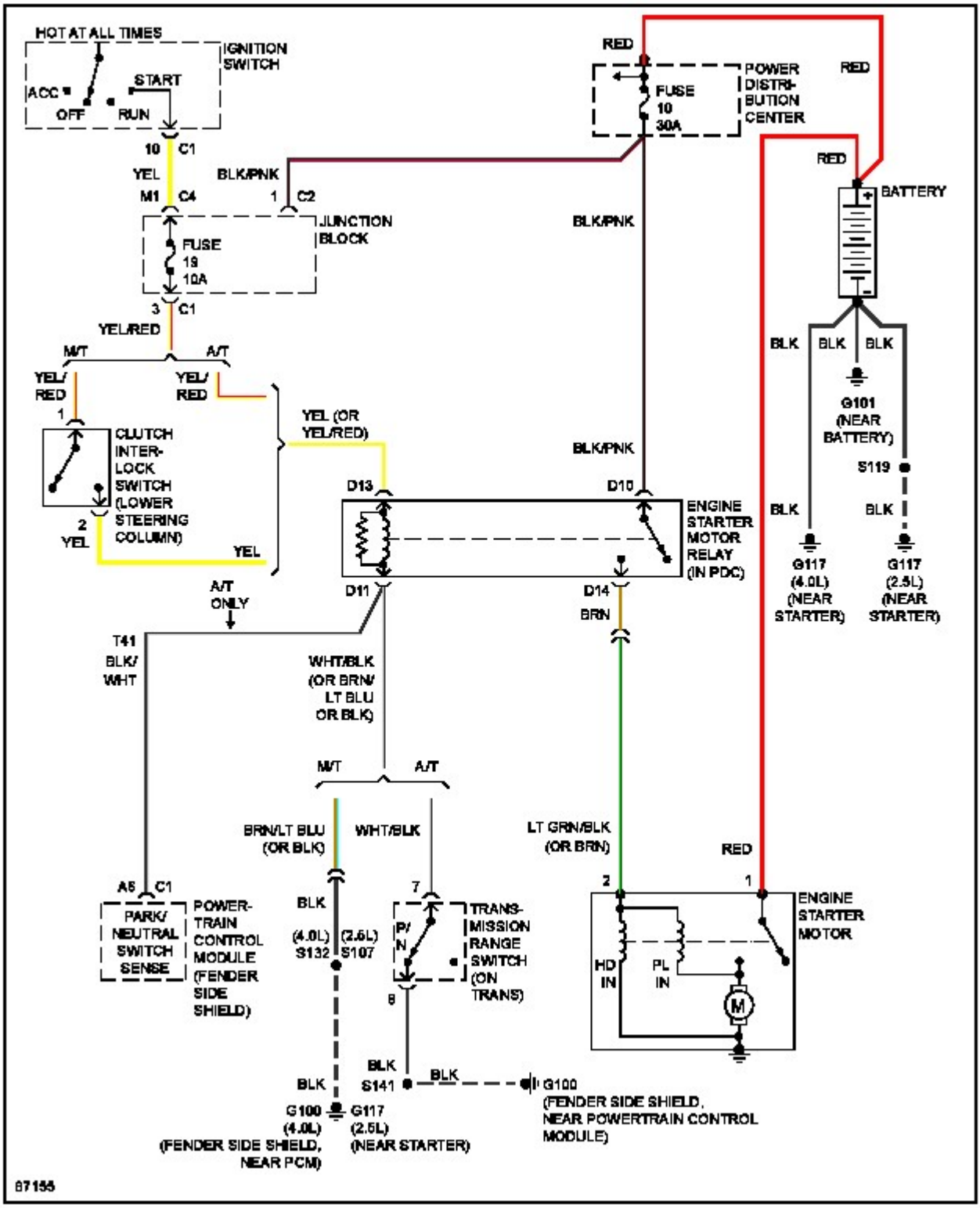
HOT AT ALL TIMES
IGNITION SWITCH
ACC
START
OFF
RUN
10
C1
YEL
M1
C4
BLK/PNK
1
C2
JUNCTION BLOCK
FUSE 19 10A
3
C1
YEL/RED
M/T
A/T
YEL/ RED
YEL/ RED
1
CLUTCH INTER-LOCK SWITCH (LOWER STEERING COLUMN)
2
YEL
YEL
YEL (OR YEL/RED)
D13
D11
A/T ONLY
T41
BLK/ WHT
WHT/BLK (OR BRN/ LT BLU OR BLK)
M/T
A/T
BRN/LT BLU (OR BLK)
WHT/BLK
A6
C1
PARK/ NEUTRAL SWITCH SENSE
POWER-TRAIN CONTROL MODULE (FENDER SIDE SHIELD)
BLK
(4.0L) S132
(2.5L) S107
7
P/ N
8
TRANS-MISSION RANGE SWITCH (ON TRANS)
BLK
S141
BLK
G100
(FENDER SIDE SHIELD, NEAR POWERTRAIN CONTROL MODULE)
BLK
G100 (4.0L)
G117 (2.5L)
(FENDER SIDE SHIELD, NEAR PCM)
(NEAR STARTER)
RED
FUSE 10 30A
POWER DISTRI-BUTION CENTER
RED
BLK/PNK
BLK/PNK
D10
ENGINE STARTER MOTOR RELAY (IN PDC)
D14
BRN
LT GRN/BLK (OR BRN)
2
1
RED
ENGINE STARTER MOTOR
HD IN
PL IN
M
RED
BATTERY
BLK
BLK
BLK
G101 (NEAR BATTERY)
S119
BLK
BLK
G117 (4.0L) (NEAR STARTER)
G117 (2.5L) (NEAR STARTER)
87155