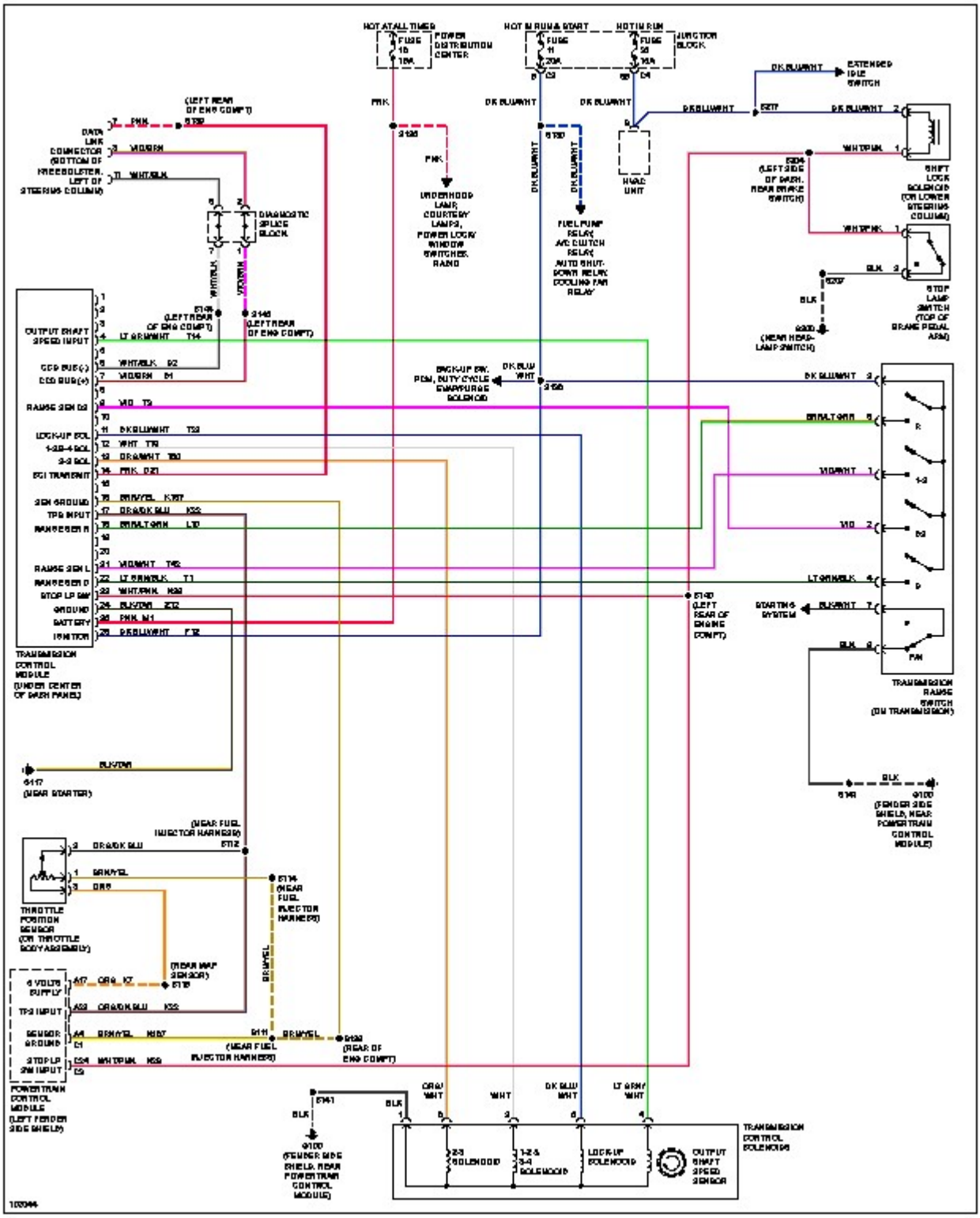

HOT AT ALL TIMES
POWER DISTRIBUTION CENTER
HOT IN RUN & START
HOT IN RUN
JUNCTION BLOCK
EXTENDED IDLE SWITCH
DATA LINK CONNECTOR (BOTTOM OF FREEBOLSTER, LEFT OF STEERING COLUMN)
DIAGNOSTIC SPLICE BLOCK
UNDERHOOD LAMP, COURTESY LAMPS, POWER LOCK/ WINDOW SWITCHES, RADIO
FUEL PUMP RELAY, A/C CLUTCH RELAY, AUTO SHUT-DOWN RELAY, COOLING FAN RELAY
HVAC UNIT
SHIFT LOCK SOLENOID (OR LOWER STEERING COLUMN)
STOP LAMP SWITCH (TOP OF BRAKE PEDAL ARM)
(NEAR HEAD-LAMP SWITCH)
OUTPUT SHAFT SPEED INPUT
CCD BUS(-)
CCD BUS(+)
RANGE SEN D2
LOCK-UP SOL
1-2/3-4 SOL
2-3 SOL
SCI TRANSMIT
SEN GROUND
TPS INPUT
RANGE SEN R
RANGE SEN L
RANGE SEN D
STOP LP SW
GROUND
BATTERY
IGNITION
TRANSMISSION CONTROL MODULE (UNDER CENTER OF DASH PANEL)
BACK-UP SW, PCM, DUTY CYCLE EVAP/PURGE SOLENOID
STARTING SYSTEM
TRANSMISSION RANGE SWITCH (ON TRANSMISSION)
(NEAR STARTER)
(NEAR FUEL INJECTOR HARNESS)
THROTTLE POSITION SENSOR (OR THROTTLE BODY ASSEMBLY)
(NEAR MAP SENSOR)
6 VOLTS SUPPLY
TPS INPUT
SENSOR GROUND
STOP LP SW INPUT
POWERTRAIN CONTROL MODULE (LEFT FENDER SIDE SHIELD)
(FENDER SIDE SHIELD, NEAR POWERTRAIN CONTROL MODULE)
TRANSMISSION CONTROL SOLENOIDS
2-3 SOLENOID
1-2 & 3-4 SOLENOID
LOCK-UP SOLENOID
OUTPUT SHAFT SPEED SENSOR