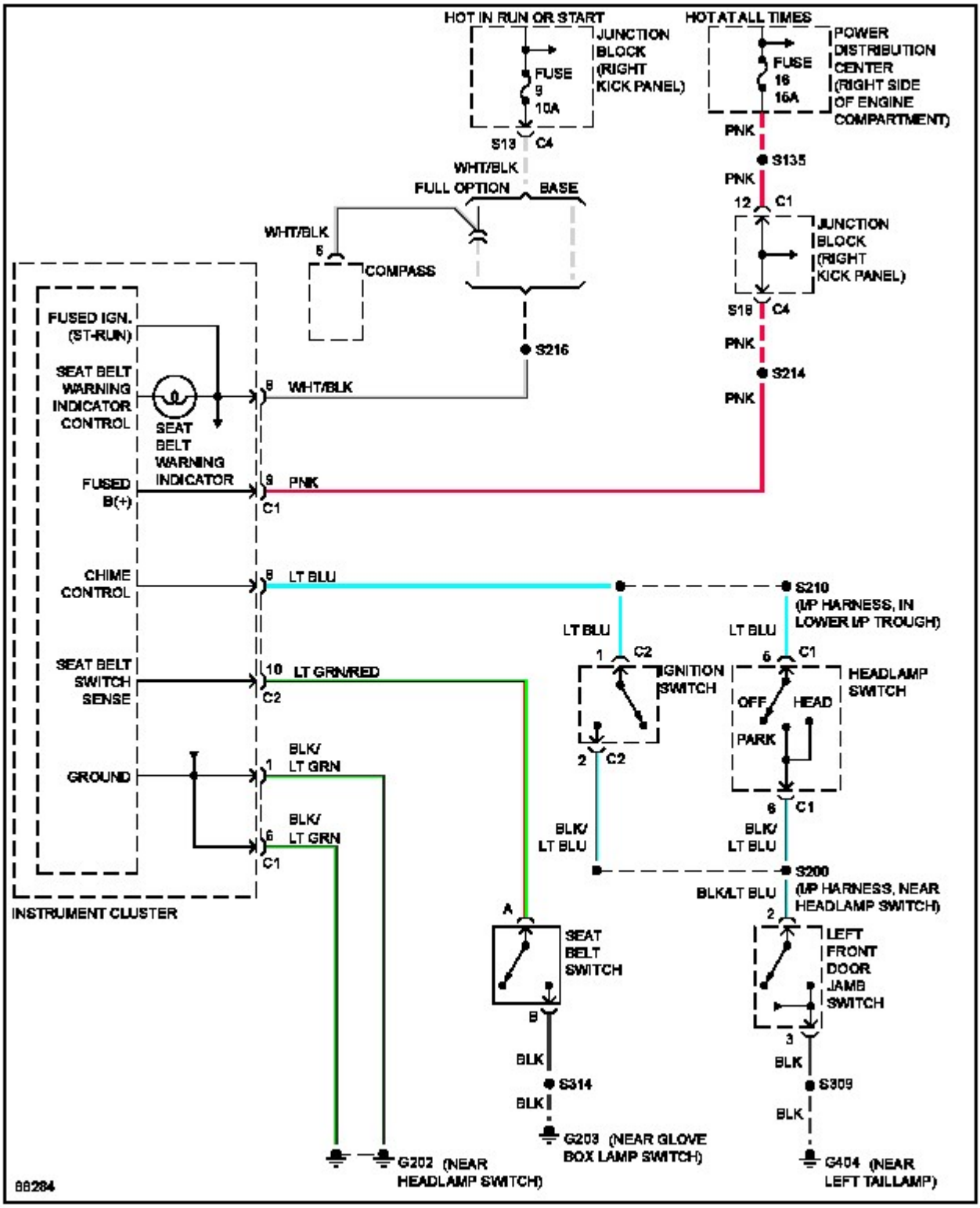
HOT IN RUN OR START
JUNCTION BLOCK (RIGHT KICK PANEL)
FUSE 9 10A
S13 C4
HOT AT ALL TIMES
POWER DISTRIBUTION CENTER (RIGHT SIDE OF ENGINE COMPARTMENT)
FUSE 16 16A
PNK
S135
PNK
12 C1
JUNCTION BLOCK (RIGHT KICK PANEL)
S18 C4
PNK
S214
PNK
WHT/BLK
FULL OPTION
BASE
WHT/BLK
5
COMPASS
S216
FUSED IGN. (ST-RUN)
SEAT BELT WARNING INDICATOR CONTROL
SEAT BELT WARNING INDICATOR
8 WHT/BLK
FUSED B(+)
9 PNK
C1
CHIME CONTROL
8 LT BLU
S210
(I/P HARNESS, IN LOWER I/P TROUGH)
LT BLU
LT BLU
1 C2
IGNITION SWITCH
6 C1
HEADLAMP SWITCH
OFF
HEAD
PARK
SEAT BELT SWITCH SENSE
10 LT GRN/RED
C2
2 C2
6 C1
GROUND
1 BLK/ LT GRN
6 BLK/ LT GRN
C1
BLK/ LT BLU
BLK/ LT BLU
S200
(I/P HARNESS, NEAR HEADLAMP SWITCH)
BLK/LT BLU
2
INSTRUMENT CLUSTER
A
SEAT BELT SWITCH
B
LEFT FRONT DOOR JAMB SWITCH
3
BLK
BLK
S314
S309
BLK
BLK
G203 (NEAR GLOVE BOX LAMP SWITCH)
G404 (NEAR LEFT TAILLAMP)
G202 (NEAR HEADLAMP SWITCH)
88284