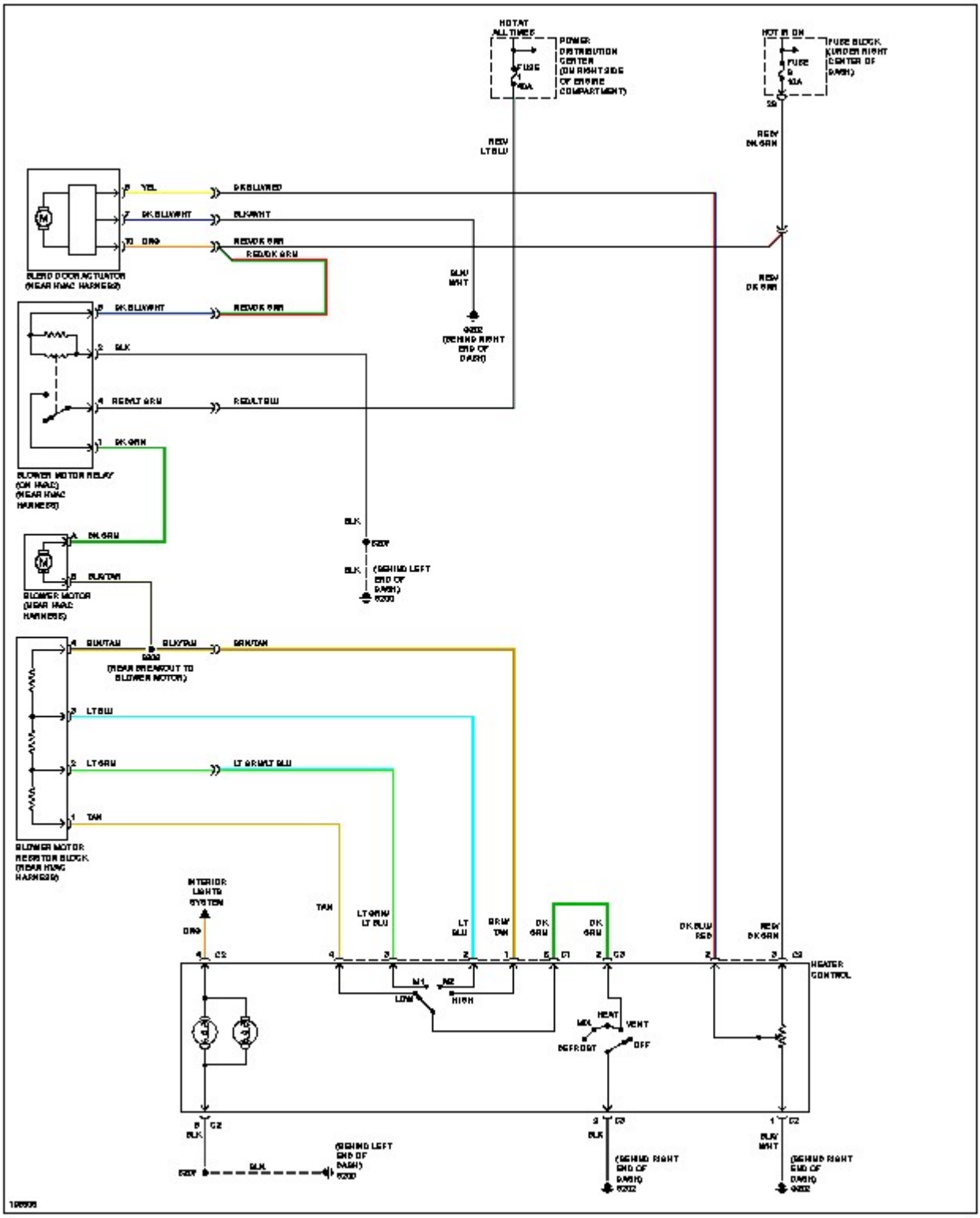

HOT AT ALL TIMES
POWER DISTRIBUTION CENTER (ON RIGHT SIDE OF ENGINE COMPARTMENT)
FUSE
HOT IN ON
FUSE BLOCK (UNDER RIGHT CENTER OF DASH)
FUSE
BLEND DOOR ACTUATOR (NEAR HVAC HARNESS)
BLOWER MOTOR RELAY (ON HVAC) (NEAR HVAC HARNESS)
BLOWER MOTOR (NEAR HVAC HARNESS)
BLOWER MOTOR RESISTOR BLOCK (NEAR HVAC HARNESS)
(REAR BREAKOUT TO BLOWER MOTOR)
INTERIOR LIGHTS SYSTEM
HEATER CONTROL
LOW
HIGH
HEAT
VENT
DEFROST
OFF
(BEHIND RIGHT END OF DASH)
(BEHIND LEFT END OF DASH)