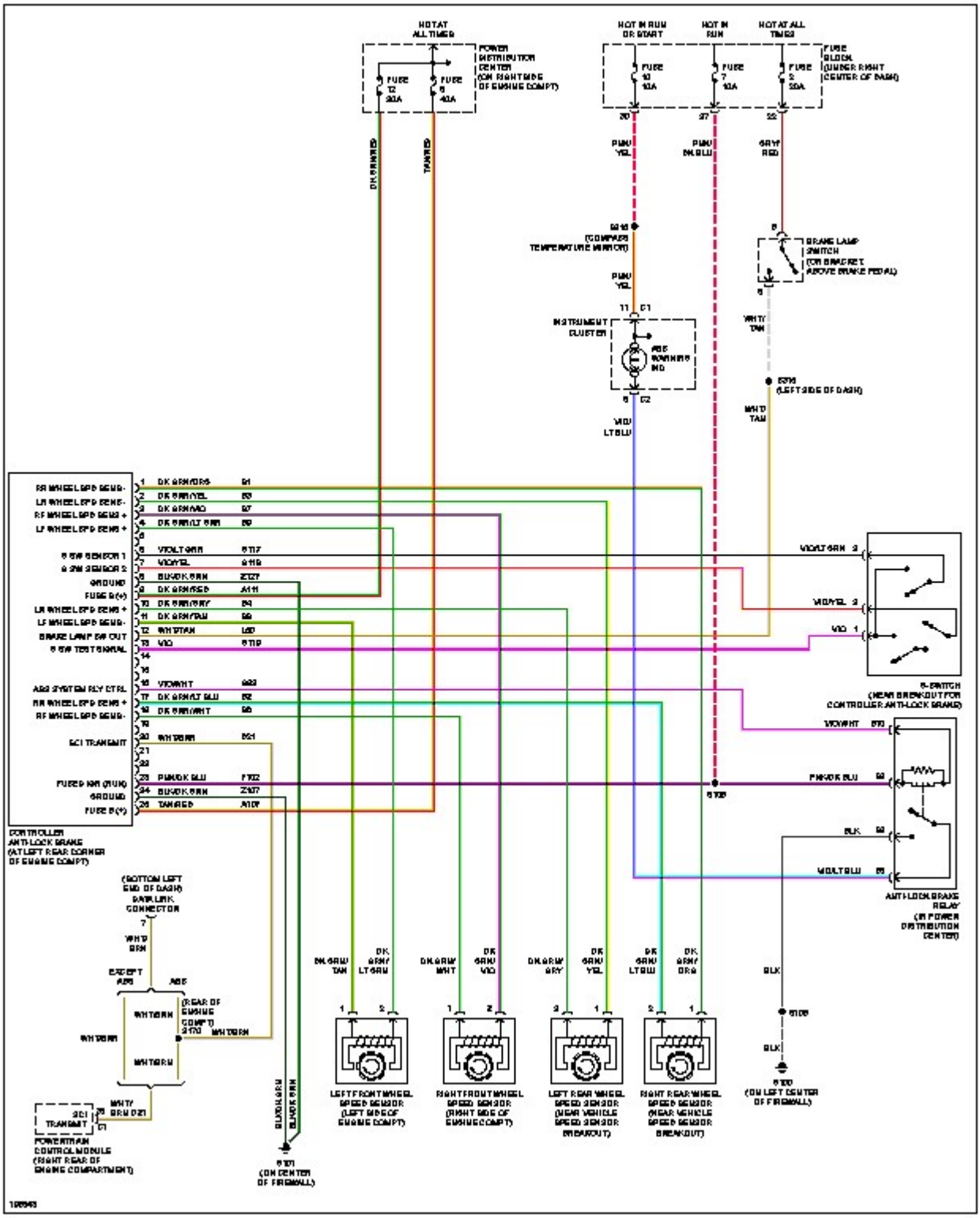

HOT AT ALL TIMES
POWER DISTRIBUTION CENTER (ON RIGHT SIDE OF ENGINE COMPT)
FUSE 12 20A
FUSE 6 40A
HOT IN RUN OR START
HOT IN RUN
HOT AT ALL TIMES
FUSE BLOCK (UNDER RIGHT CENTER OF DASH)
FUSE 10 10A
FUSE 7 10A
FUSE 2 20A
DK GRN/RED
TAN/RED
PNK/YEL
PNK/BLU
GRY/RED
(COMPASS TEMPERATURE MIRROR)
BRAKE LAMP SWITCH (ON BRACKET ABOVE BRAKE PEDAL)
INSTRUMENT CLUSTER
ABS WARNING IND
WHT/TAN
(LEFT SIDE OF DASH)
VIO/LT BLU
RR WHEEL SPD SENS-
LR WHEEL SPD SENS-
RF WHEEL SPD SENS +
LF WHEEL SPD SENS +
S SW SENSOR 1
S SW SENSOR 2
GROUND
FUSE B(+)
LR WHEEL SPD SENS +
LF WHEEL SPD SENS-
BRAKE LAMP SW OUT
S SW TEST SIGNAL
ABS SYSTEM RLY CTRL
RR WHEEL SPD SENS +
RF WHEEL SPD SENS-
SCI TRANSMIT
FUSED IGN (RUN)
GROUND
FUSE B(+)
CONTROLLER ANTI-LOCK BRAKE (AT LEFT REAR CORNER OF ENGINE COMPT)
DK GRN/ORG
DK GRN/YEL
DK GRN/VIO
DK GRN/LT GRN
VIO/LT GRN
VIO/YEL
BLK/DK GRN
DK GRN/RED
DK GRN/GRY
DK GRN/TAN
WHT/TAN
VIO
VIO/WHT
DK GRN/LT BLU
DK GRN/WHT
WHT/BRN
PNK/DK BLU
BLK/DK GRN
TAN/RED
VIO/LT GRN
VIO/YEL
VIO
S-SWITCH (NEAR BREAKOUT FOR CONTROLLER ANTI-LOCK BRAKE)
VIO/WHT
PNK/DK BLU
BLK
VIO/LT BLU
ANTI-LOCK BRAKE RELAY (IN POWER DISTRIBUTION CENTER)
(BOTTOM LEFT END OF DASH)
DATA LINK CONNECTOR
WHT/BRN
EXCEPT ABS
ABS
(REAR OF ENGINE COMPT)
WHT/BRN
WHT/BRN
WHT/BRN
WHT/BRN
SCI TRANSMIT
POWERTRAIN CONTROL MODULE (RIGHT REAR OF ENGINE COMPARTMENT)
BLK/DK GRN
BLK/DK GRN
(ON CENTER OF FIREWALL)
DK GRN/TAN
DK GRN/LT GRN
DK GRN/WHT
DK GRN/VIO
DK GRN/GRY
DK GRN/YEL
DK GRN/LT BLU
DK GRN/ORG
LEFT FRONT WHEEL SPEED SENSOR (LEFT SIDE OF ENGINE COMPT)
RIGHT FRONT WHEEL SPEED SENSOR (RIGHT SIDE OF ENGINE COMPT)
LEFT REAR WHEEL SPEED SENSOR (NEAR VEHICLE SPEED SENSOR BREAKOUT)
RIGHT REAR WHEEL SPEED SENSOR (NEAR VEHICLE SPEED SENSOR BREAKOUT)
BLK
BLK
(ON LEFT CENTER OF FIREWALL)