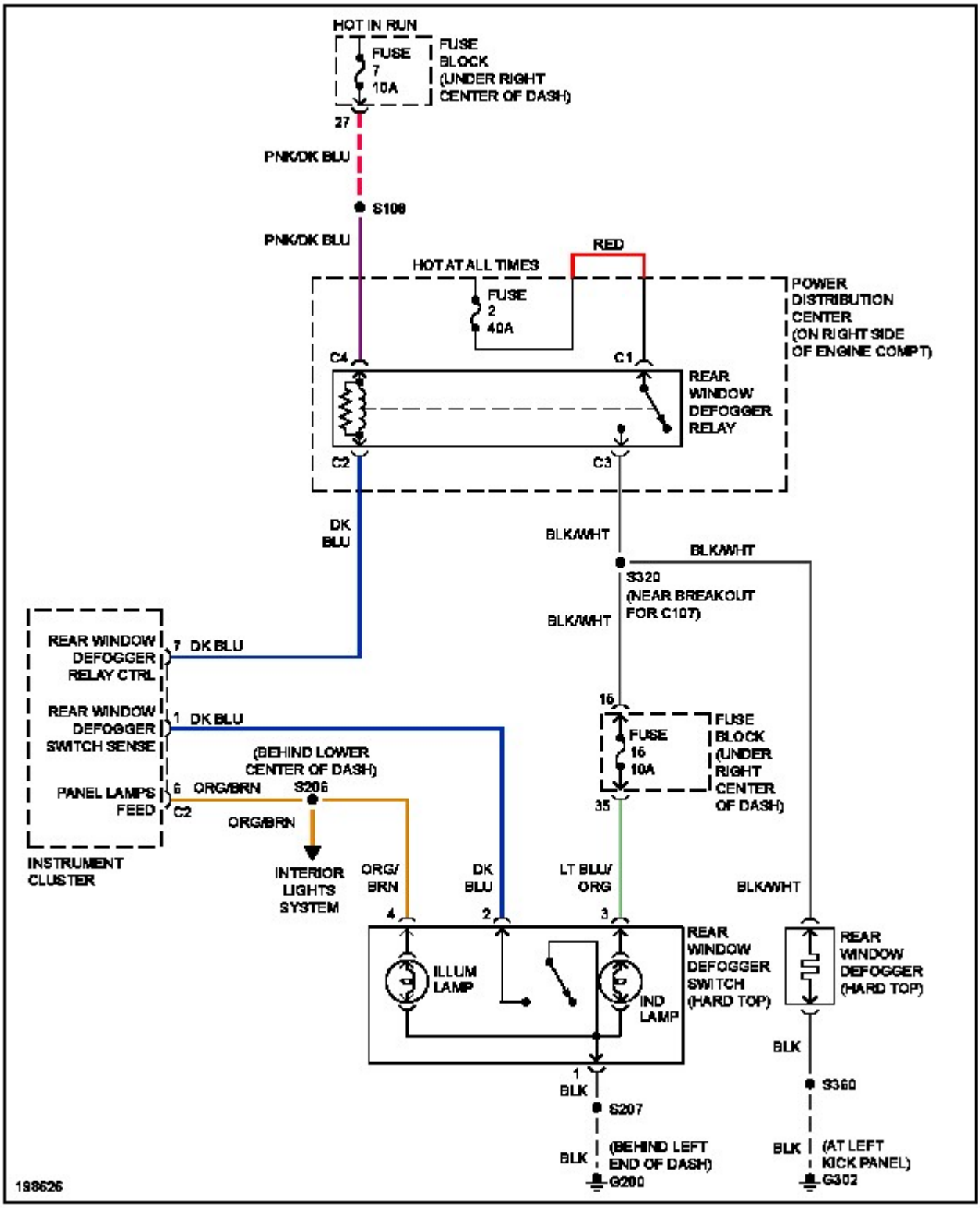
HOT IN RUN
FUSE 7 10A
FUSE BLOCK (UNDER RIGHT CENTER OF DASH)
27
PNK/DK BLU
S108
PNK/DK BLU
RED
HOT AT ALL TIMES
FUSE 2 40A
POWER DISTRIBUTION CENTER (ON RIGHT SIDE OF ENGINE COMPT)
C4
C1
REAR WINDOW DEFOGGER RELAY
C2
C3
DK BLU
BLK/WHT
BLK/WHT
S320 (NEAR BREAKOUT FOR C107)
BLK/WHT
REAR WINDOW DEFOGGER RELAY CTRL
7 DK BLU
REAR WINDOW DEFOGGER SWITCH SENSE
1 DK BLU
16
FUSE 16 10A
FUSE BLOCK (UNDER RIGHT CENTER OF DASH)
35
(BEHIND LOWER CENTER OF DASH)
PANEL LAMPS FEED
6 ORG/BRN
S206
C2
ORG/BRN
INSTRUMENT CLUSTER
INTERIOR LIGHTS SYSTEM
ORG/ BRN
DK BLU
LT BLU/ ORG
BLK/WHT
4
2
3
ILLUM LAMP
IND LAMP
REAR WINDOW DEFOGGER SWITCH (HARD TOP)
REAR WINDOW DEFOGGER (HARD TOP)
BLK
1
BLK
S207
S360
BLK
(BEHIND LEFT END OF DASH)
G200
BLK
(AT LEFT KICK PANEL)
G302
198626