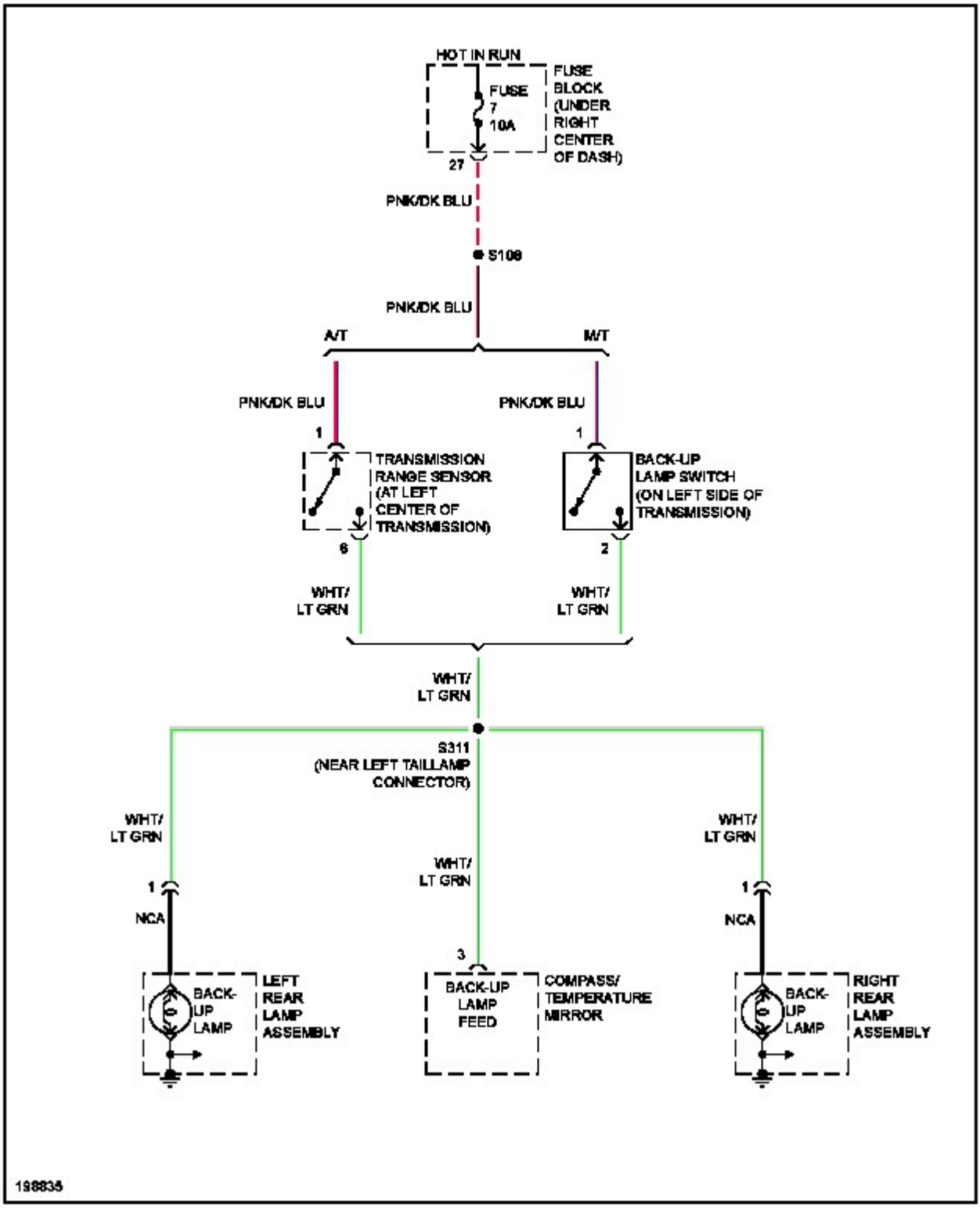
HOT IN RUN
FUSE 7 10A
FUSE BLOCK (UNDER RIGHT CENTER OF DASH)
27
PNK/DK BLU
S108
PNK/DK BLU
A/T
M/T
PNK/DK BLU
PNK/DK BLU
1
1
TRANSMISSION RANGE SENSOR (AT LEFT CENTER OF TRANSMISSION)
BACK-UP LAMP SWITCH (ON LEFT SIDE OF TRANSMISSION)
6
2
WHT/ LT GRN
WHT/ LT GRN
WHT/ LT GRN
S311 (NEAR LEFT TAILLAMP CONNECTOR)
WHT/ LT GRN
WHT/ LT GRN
WHT/ LT GRN
1
1
NCA
NCA
3
BACK-UP LAMP
LEFT REAR LAMP ASSEMBLY
BACK-UP LAMP FEED
COMPASS/ TEMPERATURE MIRROR
BACK-UP LAMP
RIGHT REAR LAMP ASSEMBLY
198835