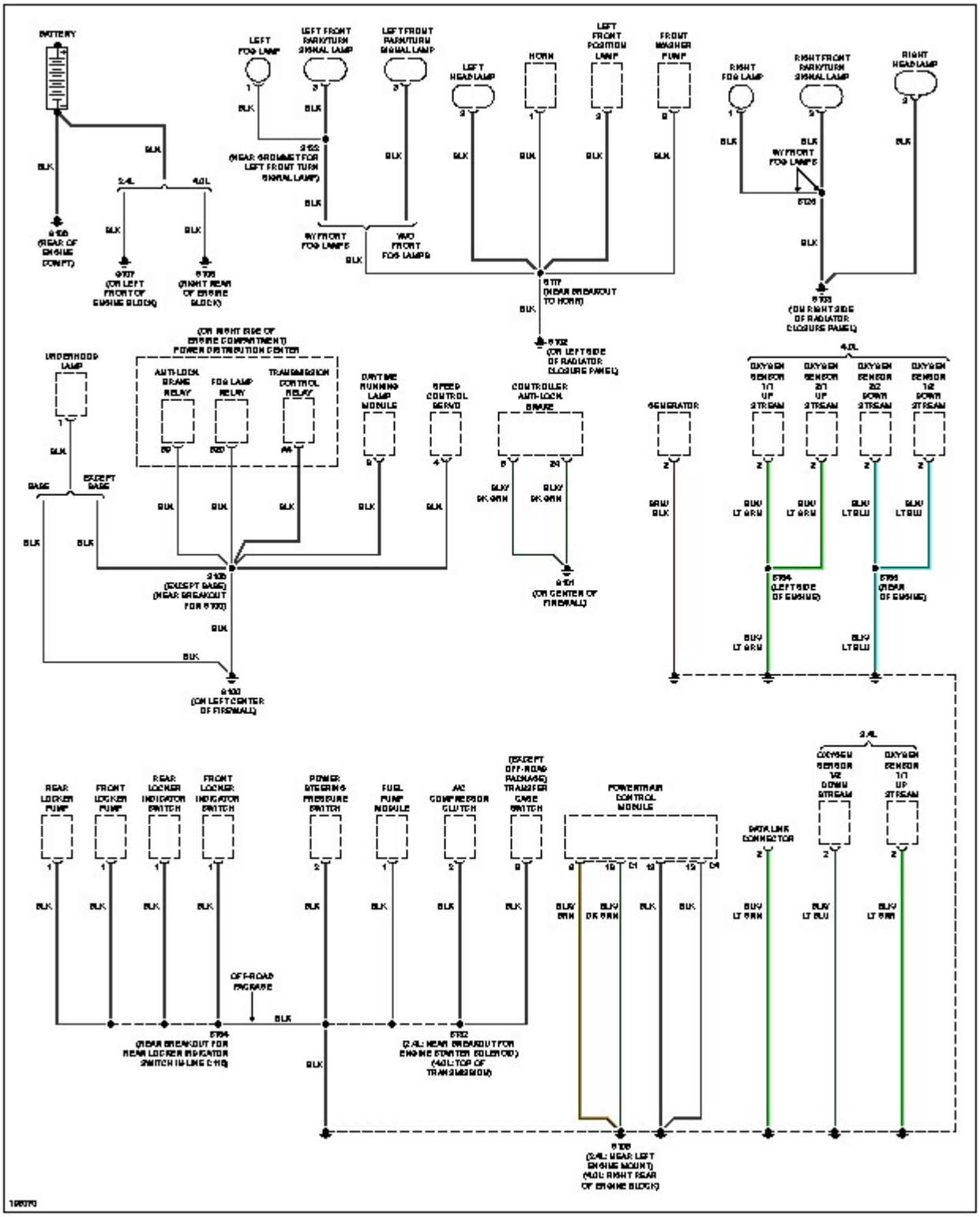
BATTERY
LEFT FOG LAMP
LEFT FRONT PARK/TURN SIGNAL LAMP
LEFT FRONT PARK/TURN SIGNAL LAMP
LEFT HEAD LAMP
HORN
LEFT FRONT POSITION LAMP
FRONT WASHER PUMP
RIGHT FOG LAMP
RIGHT FRONT PARK/TURN SIGNAL LAMP
RIGHT HEAD LAMP
BLK
2.4L
4.0L
(NEAR GROMMET FOR LEFT FRONT TURN SIGNAL LAMP)
W/ FRONT FOG LAMPS
W/O FRONT FOG LAMPS
W/ FRONT FOG LAMPS
(NEAR BREAKOUT TO HORN)
(ON LEFT SIDE OF RADIATOR CLOSURE PANEL)
(ON RIGHT SIDE OF RADIATOR CLOSURE PANEL)
(REAR OF ENGINE COMPT)
(ON LEFT FRONT OF ENGINE BLOCK)
(RIGHT REAR OF ENGINE BLOCK)
(ON RIGHT SIDE OF ENGINE COMPARTMENT) POWER DISTRIBUTION CENTER
UNDERHOOD LAMP
AUTO LOCK BRAKE RELAY
FOG LAMP RELAY
TRANSMISSION CONTROL RELAY
DAYTIME RUNNING LAMP MODULE
SPEED CONTROL SERVO
CONTROLLER AUTO LOCK BRAKE
GENERATOR
OXYGEN SENSOR 1/1 UP STREAM
OXYGEN SENSOR 2/1 UP STREAM
OXYGEN SENSOR 2/2 DOWN STREAM
OXYGEN SENSOR 1/2 DOWN STREAM
BASE
EXCEPT BASE
(EXCEPT BASE) (NEAR BREAKOUT FOR S100)
(ON CENTER OF FIREWALL)
(LEFT SIDE OF ENGINE)
(REAR OF ENGINE)
(ON LEFT CENTER OF FIREWALL)
REAR LOCKER PUMP
FRONT LOCKER PUMP
REAR LOCKER INDICATOR SWITCH
FRONT LOCKER INDICATOR SWITCH
POWER STEERING PRESSURE SWITCH
FUEL PUMP MODULE
A/C COMPRESSOR CLUTCH
(EXCEPT OFF-ROAD PACKAGE) TRANSFER CASE SWITCH
POWERTRAIN CONTROL MODULE
DATA LINK CONNECTOR
OFF-ROAD PACKAGE
(NEAR BREAKOUT FOR REAR LOCKER INDICATOR SWITCH IN LINE C-10)
(2.4L: NEAR BREAKOUT FOR ENGINE STARTER SOLENOID) (4.0L: TOP OF TRANSMISSION)
(2.4L: NEAR LEFT ENGINE MOUNT) (4.0L: RIGHT REAR OF ENGINE BLOCK)
19970