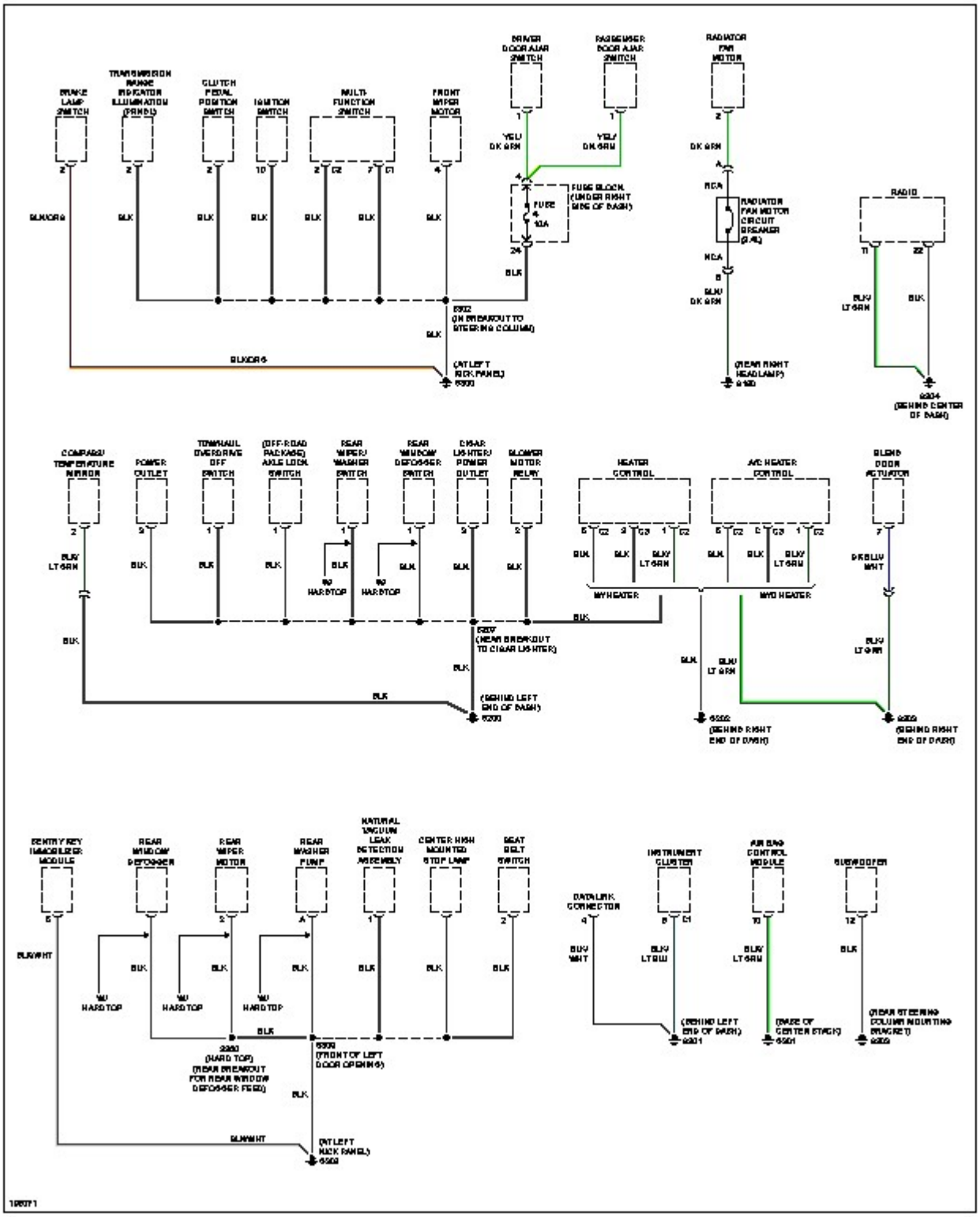
BRAKE LAMP SWITCH
TRANSMISSION RANGE INDICATOR ILLUMINATION (PRNDL)
CLUTCH PEDAL POSITION SWITCH
IGNITION SWITCH
MULTI-FUNCTION SWITCH
FRONT WIPER MOTOR
DRIVER DOOR AJAR SWITCH
PASSENGER DOOR AJAR SWITCH
RADIATOR FAN MOTOR
FUSE BLOCK (UNDER RIGHT SIDE OF DASH)
FUSE 4 10A
RADIATOR FAN MOTOR CIRCUIT BREAKER (5.4L)
RADIO
(ON BREAKOUT TO STEERING COLUMN)
(AT LEFT KICK PANEL)
(REAR RIGHT HEADLAMP)
(BEHIND CENTER OF DASH)
COMPASS/ TEMPERATURE MIRROR
POWER OUTLET
TOWHAUL OVERDRIVE OFF SWITCH
(OFF-ROAD PACKAGE) AXLE LOCK SWITCH
REAR WIPER/ WASHER SWITCH
REAR WINDOW DEFOGGER SWITCH
CIGAR LIGHTER/ POWER OUTLET
BLOWER MOTOR RELAY
HEATER CONTROL
A/C HEATER CONTROL
BLEND DOOR ACTUATOR
W/ HARDTOP
W/ HARDTOP
W/ HEATER
W/O HEATER
(NEAR BREAKOUT TO CIGAR LIGHTER)
(BEHIND LEFT END OF DASH)
(BEHIND RIGHT END OF DASH)
(BEHIND RIGHT END OF DASH)
SENTRY KEY IMMOBILIZER MODULE
REAR WINDOW DEFOGGER
REAR WIPER MOTOR
REAR WASHER PUMP
NATURAL VACUUM LEAK DETECTION ASSEMBLY
CENTER HIGH MOUNTED STOP LAMP
SEAT BELT SWITCH
DATA LINK CONNECTOR
INSTRUMENT CLUSTER
AIR BAG CONTROL MODULE
SUBWOOFER
W/ HARDTOP
W/ HARDTOP
W/ HARDTOP
(HARD TOP) (REAR BREAKOUT FOR REAR WINDOW DEFOGGER FEED)
(FRONT OF LEFT DOOR OPENING)
(BEHIND LEFT END OF DASH)
(BASE OF CENTER STACK)
(REAR STEERING COLUMN MOUNTING BRACKET)
(AT LEFT KICK PANEL)
189071