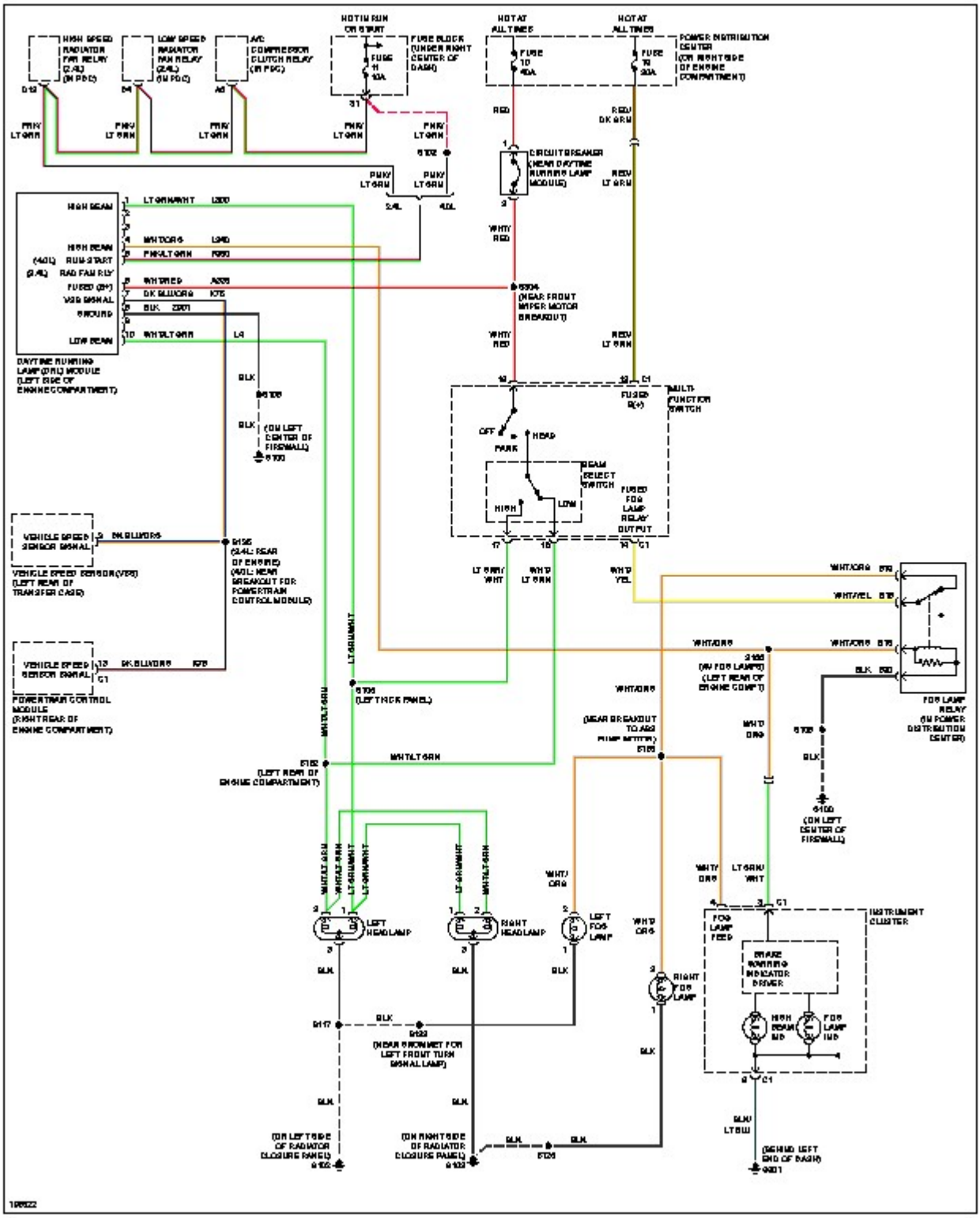
HIGH SPEED RADIATOR FAN RELAY (2.4L) (IN PDC)
LOW SPEED RADIATOR FAN RELAY (2.4L) (IN PDC)
A/C COMPRESSOR CLUTCH RELAY (IN PDC)
HOT IN RUN OR START
FUSE BLOCK (UNDER RIGHT CENTER OF DASH)
HOT AT ALL TIMES
POWER DISTRIBUTION CENTER (ON RIGHT SIDE OF ENGINE COMPARTMENT)
CIRCUIT BREAKER (NEAR DAYTIME RUNNING LAMP MODULE)
HIGH BEAM
RUN-START
RAD FAN RLY
FUSED (B+)
VSS SIGNAL
GROUND
LOW BEAM
DAYTIME RUNNING LAMP (DRL) MODULE (LEFT SIDE OF ENGINE COMPARTMENT)
(ON LEFT CENTER OF FIREWALL)
(NEAR FRONT WIPER MOTOR BREAKOUT)
MULTI-FUNCTION SWITCH
OFF
PARK
HEAD
BEAM SELECT SWITCH
HIGH
LOW
FUSED FOG LAMP RELAY OUTPUT
VEHICLE SPEED SENSOR SIGNAL
VEHICLE SPEED SENSOR (VSS) (LEFT REAR OF TRANSFER CASE)
(2.4L: REAR OF ENGINE) (4.0L: NEAR BREAKOUT FOR POWERTRAIN CONTROL MODULE)
POWERTRAIN CONTROL MODULE (RIGHT REAR OF ENGINE COMPARTMENT)
(LEFT KICK PANEL)
(LEFT REAR OF ENGINE COMPARTMENT)
(IN FOG LAMPS) (LEFT REAR OF ENGINE COMPT)
(NEAR BREAKOUT TO ABS PUMP MOTOR)
FOG LAMP RELAY (IN POWER DISTRIBUTION CENTER)
(ON LEFT CENTER OF FIREWALL)
LEFT HEAD LAMP
RIGHT HEAD LAMP
LEFT FOG LAMP
RIGHT FOG LAMP
FOG LAMP FEED
INSTRUMENT CLUSTER
BRAKE WARNING INDICATOR DRIVER
HIGH BEAM IND
FOG LAMP IND
(NEAR BRONNET FOR LEFT FRONT TURN SIGNAL LAMP)
(ON LEFT SIDE OF RADIATOR CLOSURE PANEL)
(ON RIGHT SIDE OF RADIATOR CLOSURE PANEL)
(BEHIND LEFT END OF DASH)